809A

MAINTENANCE INFORMATION

LEAR SIEGLER, INC.
SIERRA ELECTRONIC DIVISION
3885 Bohannon Drive Menlo Park, CA 94025
Tel.(415) 321-5374 TWX 910-373-1282

4.13.16 PRESS 809A SET REMOTE. VERIFY REMOTE//SETTING (SEQUENCE) LED IS ON.

4.13.17 PRESS 1 2 3 4 5 6 7 8 9 . 0 # R AND REMOTE SETTING LED IS OFF. VERIFY THAT 1 2 3 4 5 6 7 8 9 . 0 APPEARED ON ADM3.

4.13.18 PRESS "SET REMOTE". VERIFY "REMOTE SETTING" LED IS OFF.

4.13.19 PRESS 809A REMOTE CONTROL KEY.

4.13.20 VERIFY REMOTE/CONTROL STATUS LED IS ON AND ALL 809A KEYS ARE LOCKED OUT (IE, NOTHING SHOULD PRINTOUT ON THE ADM3 WHEN KEYS ARE PRESSED. NO RESPONSES ON 809A).

4.13.21 PRESS ADM3 BREAK KEY. OBSERVE 809A HAND SHAKE SEQUENCING ACROSS ADM3 SCREEN WITH BEEP TONE.

4.13.22 PRESS THE ADM3 AND VERIFY ON THE 809A AS FOLLOWS:

ADM3	VERIFY ON THE 809A
A	1004 Hz, 0.0 dBm FLASHING
#	1004 Hz FLASING, 0.0 dBm
$	NEXT TEST FLASHING
D	TEST RDY FLASHING
M	CKTL (MOMENTARILY) THEN DISPLAYS 1004 Hz, 0.0 dBm.

4.13.23 PRESS THE ADM3 AND VERIFY THE FOLLOWING:

ADM3	VERIFY
A	NEXT TEST FLASHES
R	REMOTE/CONTROL (STATUS) LED IS OFF AND HAND SHAKE SEQUENCY HAS STOPPED.

4.13.24 REFER TO FIGURE 5.9.

4.13.25 ADJUST THE OUTPUT POWER SUPPLY TO 35 VOLTS BEFORE CONNECTING IT INTO THE CIRCUIT.

4.13.26 TURN ON THE POWER SUPPLY.

4.13.27 SET THE POWER SUPPLY TO READ MA.

4.13.28 PRESS 809A RECEIVE PORT A DIAL.

4.13.29 VERIFY NO CURRENT ON POWER SUPPLY METER.

4.13.30 PRESS 809A RECEIVE PORT A HOLD.

Digitized by the Internet Archive
in 2025

https://archive.org/details/manualsplus_05327

4.13.31 VERIFY 30 MA +/- 5 ON POWER SUPPLY METER.

4.13.32 PRESS 809A TRANSMIT PORT B DIAL.

4.13.33 VERIFY 30 MA +/- 5 ON POWER SUPPLY METER.

4.13.34 PRESS 809A TRANSMIT PORT B HOLD.

4.13.35 VERIFY 60 MA +/ 5 MA ON POWER SUPPLY METER.

4.13.36 LIFT EACH CORNER OF THE 809A APPROXIMATELY 2 INCHES AND AND DROP ON THE BENCH.

4.13.37 VERIFY CURRRENT REMAINS AT 60 MA AND THAT THE 809A DOES NOT SHUT OFF OR RECYCLE THROUGH THE CAL SEQUENCE.

4.13.38 PRESS 809A TRANSMIT PORT B HOLD.

4.13.39 VERIFY CURRENT DROPS 30 MA.

4.13.40 PRESS 809A TRANSMIT PORT A HOLD.

4.13.41 VERFIFY CURRENT DROPS TO 0 MA.

4.13.42 PRESS AND HOLD RESET KEY FOR APPROXIMATELY 3 SECONDS.

4.13.43 VERIFY THE 809A CYCLES THROUGH THE CALIBRATION SEQUENCE UNTIL "NEXT TEST" FLASHES. NOTE - THE 809A SHOULD NOT RESET UNLESS HELD 3 SECONDS.

4.13.44 SET ADDRESS SWITCH # 1, 3, 4, 5, 7, 8 UP; 2 AND 6 DOWN.

4.13.45 CONNECT HP9825 CALCULATOR USING HPIB BUS TO IEEE 488 INPUT AT THE LEFT REAR OF 809A.

4.13.46 LOAD THE PROGRAM BELOW INTO THE HP9825:

```
0:  dim A$[28]
1:  Wtb 729, "A$$DM"
2:  Wtb 729, "L"
3:  Wait 100
4:  red 729,A$
5:  dsp A$
6:  sto 2
```

4.13.47 RESET THE 809A.

4.13.48 WHEN THE "NEXT TEST" FLASHES ON THE DISPLAY PRESS THE "RUN" KEY ON THE HP9825.

4.13.49 VERIFY THAT THE HP 9825 WILL DISPLAY WHAT IS BEING DISPLAYED ON THE 809A.

4.13.50 TURN POWER OFF ON THE 809A. DISCONNECT THE 809A FROM POWER CORD.

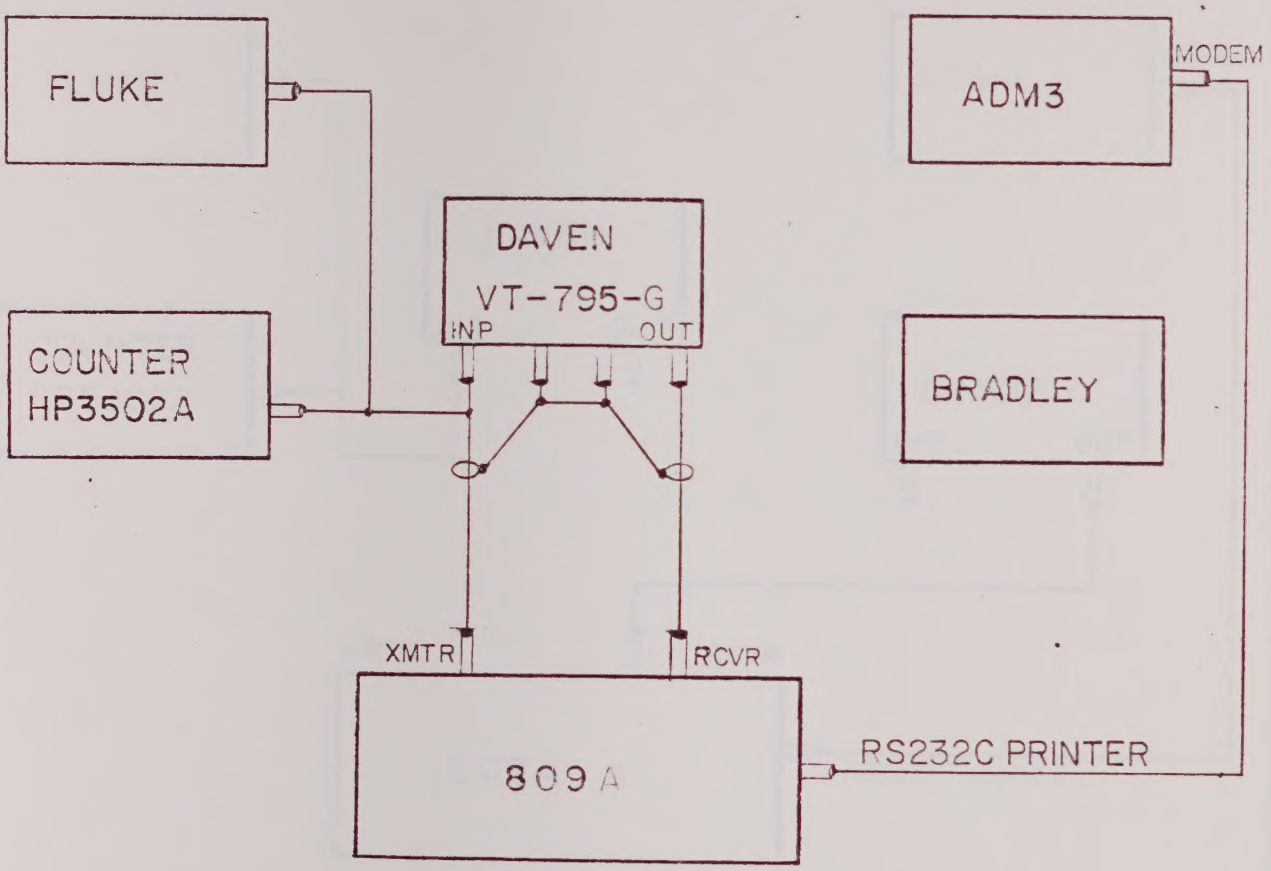

FIG. 5-1

Sierra	SIZE A	DRAWING NO. A03456500
CODE IDENT NO. 54778	SCALE	SHEET 29 OF 37

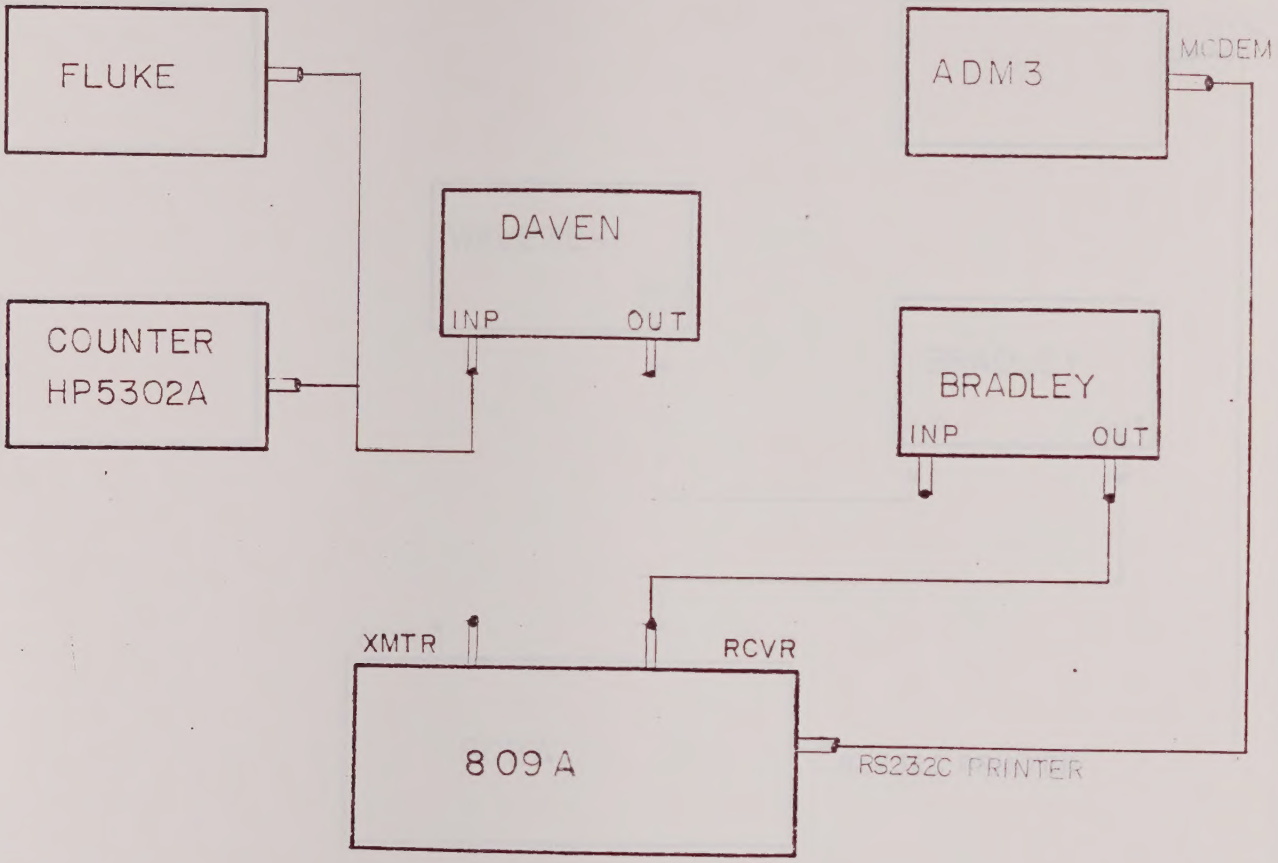

FIG. 5-2

ISi Sierra	SIZE A	DRAWING NO. A0345500
CODE IDENT NO. 54778	SCALE	SHEET 30 OF 37

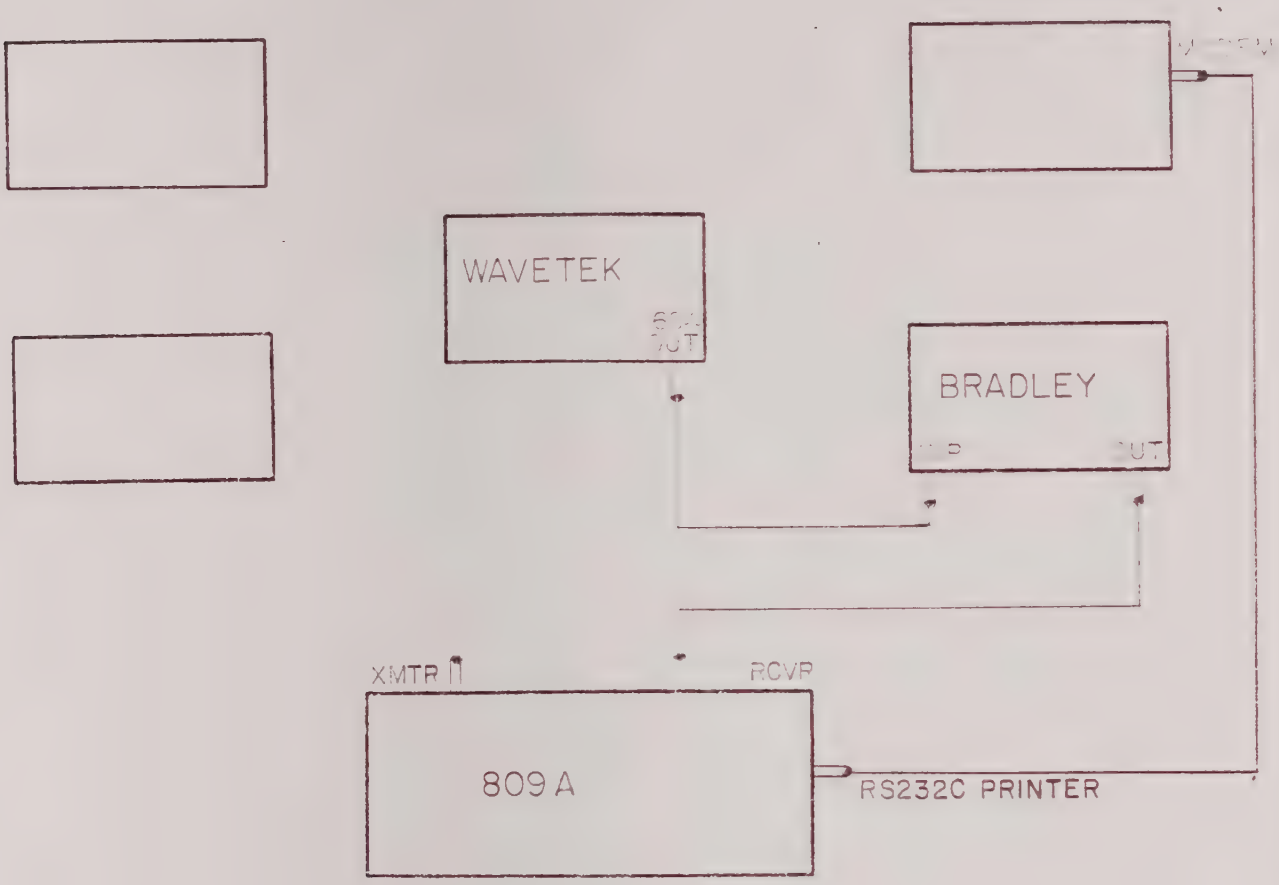

FIG. 5-3

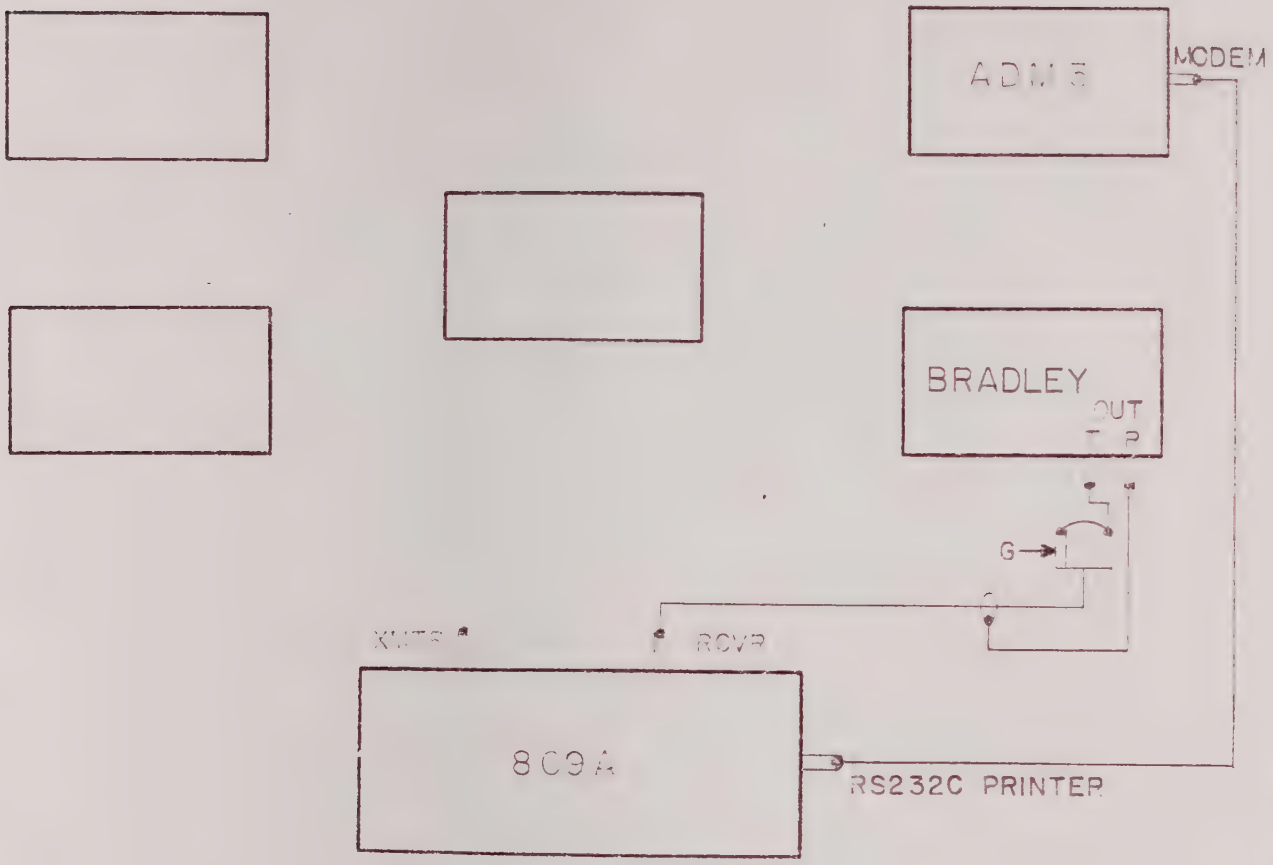

FIG 5-4

Sierra	SIZE A	DRAWING NO. AC345650C
CODE IDENT NO. 50772	SCALE	SHEET 32 OF 37

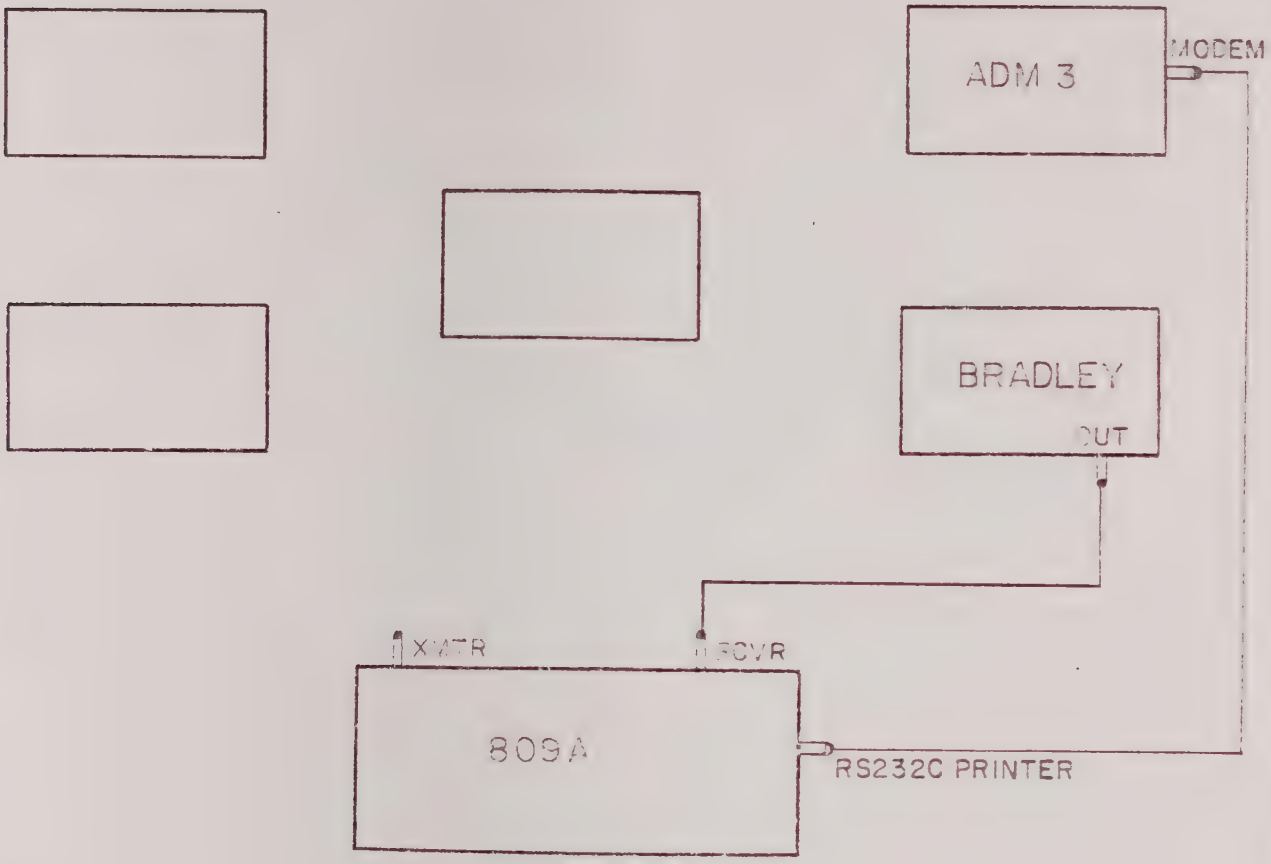

FIG. 5-5

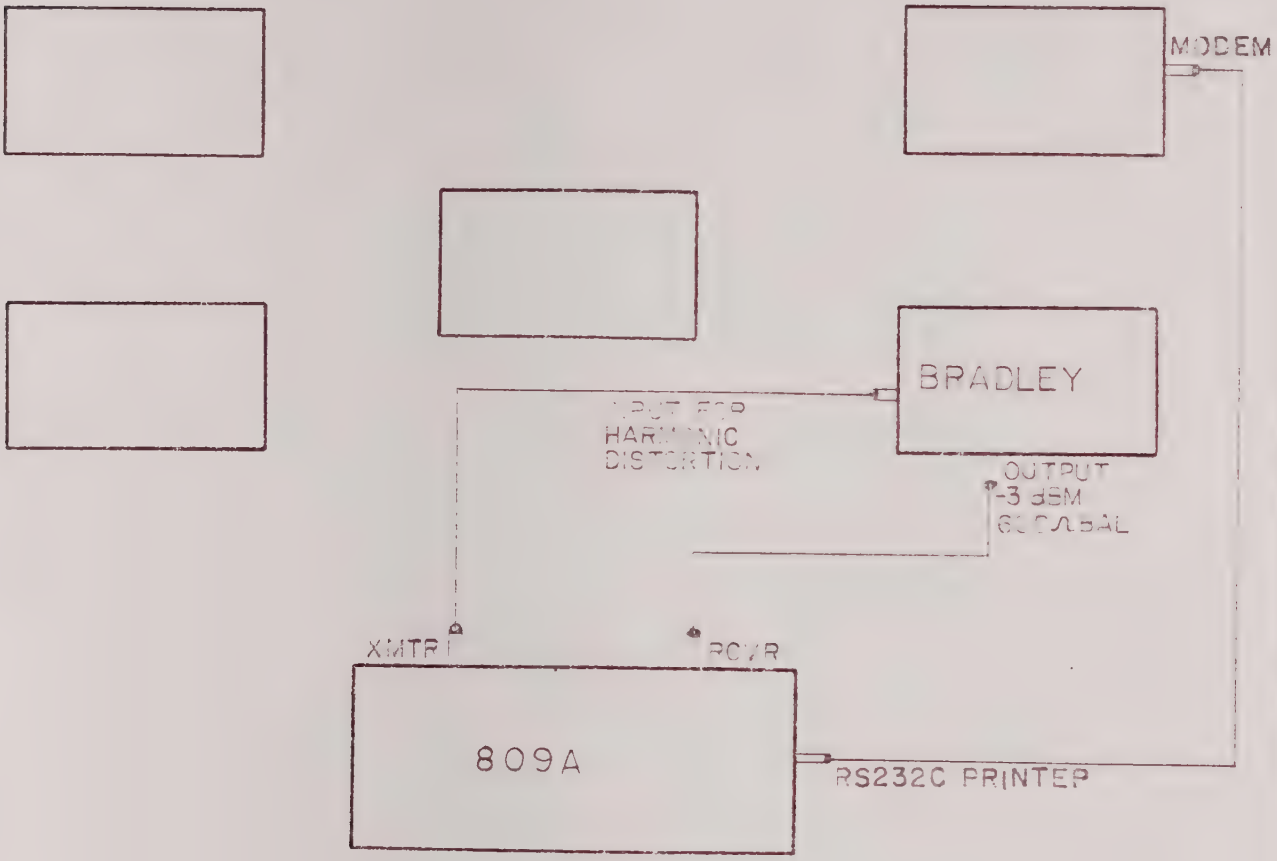

FIG. 5-6

Sierra	SIZE A	DRAWING NO. A0341[illegible]3500	
CODE IDENT NO. 04713	SCALE	SHEET 34 OF 37	

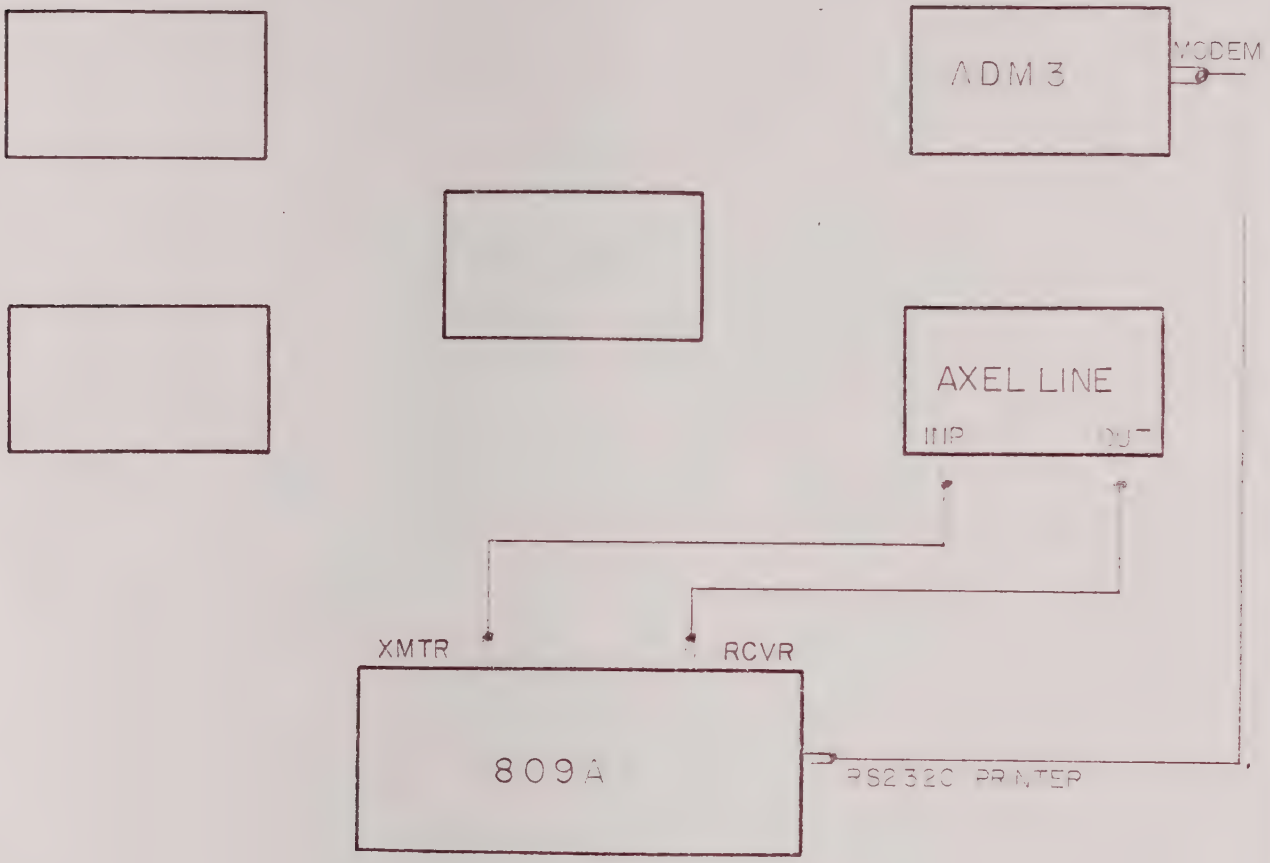

FIG. 5-7

Sierra	SIZE A	DRAWING NO. AC34565CC	
CODE IDENT NO. 54778	SCALE	SHEET 35 OF 37	

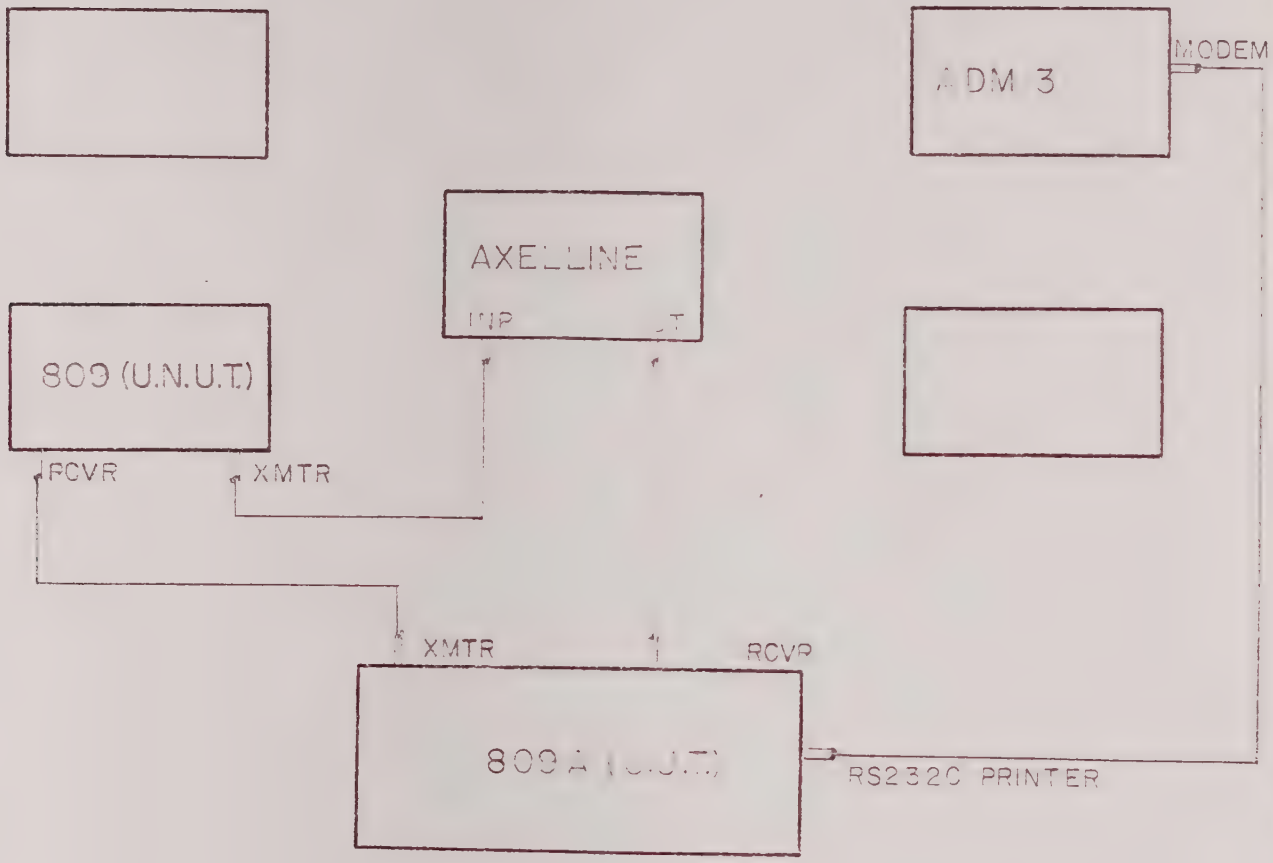

FIG.5-8

Sierra	SIZE A	DRAWING NO. A034535CC
CODE IDENT NO. 54772	SCALE	SHEET 36 OF 37

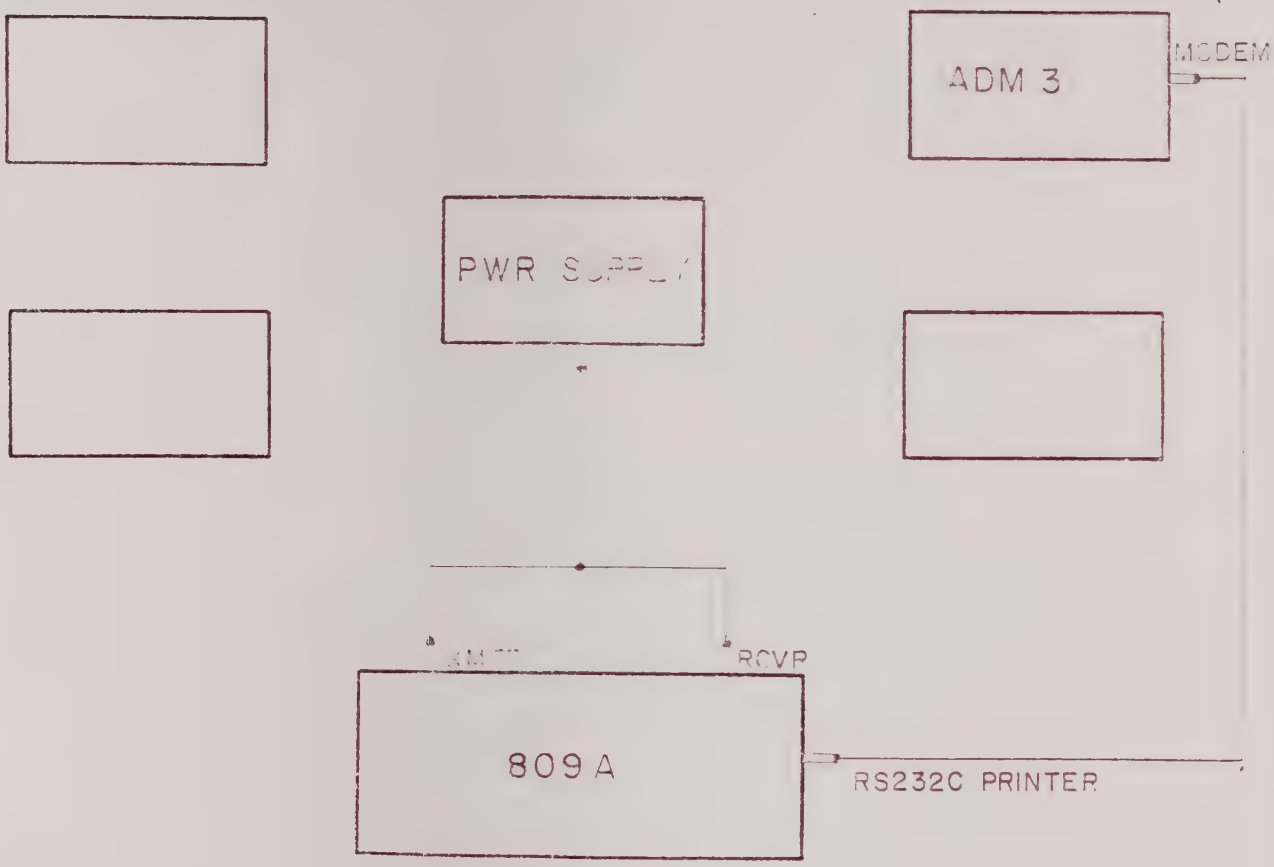

FIG.5-9

Sierra	SIZE A	DRAWING NO. AC34865CO
CODE IDENT NO. 94778	SCALE	SHEET 37 OF 37

REVISIONS			
SYM	DESCRIPTION	DATE	APPROVED
A	PRODUCTION RELEASE	6/16/82	BP

NEXT ASSY.	QTY	MODEL NO.

Sierra

LEAR SIEGLER, INC.
SIERRA ELECTRONIC DIVISION
MENLO PARK, CALIFORNIA 94025

CODE IDENT. NO.
54778

809A UNIT TEST PROCEDURES, ENG.

DATE	SIZE	DRAWING NO.	REV
6/16/82	A	A03456500	A
BY: G. Porter			
APPV'D:	STOCK AS	SHEET 1 OF 37	

671-14-1

TABLE OF CONTENTS

SECTION	DESCRIPTION
1.0	SCOPE
2.0	APPLICABLE DOCUMENTS
3.0	REQUIREMENTS
4.0	TEST PROCEDURES
	4.1 - MECHANICAL INSPECTION
	4.2 - TURN-ON SEQUENCE
	4.3 - PRE-TEST CONDITIONING
	4.4 - LEVEL FREQUENCY, MANUAL SWEEP
	4.5 - LEVEL FREQUENCY, AUTO SWEEP
	4.6 - NOISE (NOISE FILTERS)
	4.7 - NOISE/TONE (1010 Hz NOTCH FILTER)
	4.8 - PEAK TO AVERAGE RATIO: P/AR
	4.9 - PHASE JITTER
	4.10 - IMPULSE COUNT
	4.11 - INTERMODULATION
	4.12 - ENVELOPE DELAY DISTORTION
	4.13 - FINAL CHECK
5.0	ILLUSTRATIONS

1.0 - SCOPE

THIS TEST PROCEDURE PRROVIDES INFORMATION FOR TESTING THE 809A AND TO TEST IF ALL ITS FUNCTIONS MEET THE SPECIFICATIONS THAT ARE STATED IN THE BELL SYSTEM TECHNICAL REFERENCE (41009).

2.0 - APPLICABLE DOCUMENTS

1. SIERRA MODEL 809A OPERATION MANUAL SOM 809A
2. 809A PERFORMANCE SPECIFICATION
3. BELL SYSTEM TECHNICAL REFERENCE (BBSTR) 41009.

3.0 - REQUIREMENTS

- SYNTHESIZER, BRADLEY TELCOMMODE 2A/2B
- TRUE RMS VOLTMETER FLUKE MODEL #8922A
- ATTENUATOR, DAVEN VT-745-G
- TELEPHONE LINE SIMULATOR, AXEL MODEL 780
- UNIVERSAL COUNTER, HP5302A
- DISPLAY TERMINAL, LSI/EID MODEL ADMS (RS232 CABLE)
- POWER SUPPLY, HP 6205B
- RS232 CABLE, 91990043
- 310 PATCH CORD, 916400037 OR 310 TO BANANA PLUB CORD. TWO EACH 916400048
- ADAPTERS, MISC. BNC-T, BNC-310, BNC-BANANA, AND MISC. COAX CABLES
- CALCULATOR HP 9825A WITH HPIB INTERFACE 98034A, CRT AND PRINTER

4.0 TEST PROCEDURES

REFER TO SECTION 5.0 FOR THE COMMONLY USED TEST SET-UP ILLUSTRATIONS.

4.1.0 MECHANICAL INSPECTION

4.1.1 INSPECT OVERALL APPEARANCE PAYING PARTICULAR ATTENTION TO THE FIT OF CASE TOP TO BOTTOM AND PROPER APPLICATION OF LABELS AROUND CONNECTORS FRONT AND REAR.

4.1.2 CHECK KEYBOARD AND DISPLAY PANEL FOR PROPER FIT TO CASE TOP, NO BOWING OR BULGES CAUSED BY LED'S IN SEQUENCER OR STATUS AREAS AND NO DELAMINATION.

4.1.3 CHECK SERIAL TAG FOR PROPER VOLTAGES, SERIAL NUMBER, AND MODEL NUMBER.

4.1.4 CHECK AC POWER SELECTOR IS SET TO CORRECT POSITION..

DRAWING NO: A03456500 REV: A

4.2.0 TURN-ON SEQUENCE

4.2.1 SET 8009A ADDRESS SWITCHES (~~RIGHT~~ FRONT) TO OFF. (I.E., ALL DOWN). left Back'

4.2.2 CONNECT 809A POWER CORD TO PROPER VOLTAGE.

4.2.3 TURN 809A POWER SWITCH TO ON (RIGHT REAR; UP). ALLOW 15 MINUTES WARM-UP. OBSERVE POWER LED IS LIT.

4.2.4 PRESS RESET FOR APPROXIMATELY 3 SECONDS. OBSERVE FAN OPERATION, EXHAUST OUT REAR, A DISPLAY OF 809A ON LEFT SIDE OF DISPLAY AND SOFTWARE REVISION ~~1060~~ 2.65 ON RIGHT SIDE OF DISPLAY. THE ABOVE SHOULD REMAIN DISPLAYED WHILE ALL LED'S LIGHT IN SEQUENCE ON THE FRONT PANEL. NOTE: SEQUENCE BEGINS WITH (SEQUENCER) XMT LEVEL DIAL HOLD 900 ohm BRDG ATRMT UP TO (STATUS) CKT LOSS DIAL HOLD (XMT PORT B).

4.2.5 THEY SHOULD ALL TURN OFF IN THE SAME SEQUENCE AS THEY LIT UP.

4.2.6 OBSERVE THAT ALL SEGMENTS OF THE DISPLAY ARE LIT. THE FOLLOWING SHOULD BE DISPLAYED (IN SEQUENCY) MOMENTARILY:

AVE CAL
AVE PASS
PAR CAL
PAR PASS
TXER CAL
XTAL CAL
EDD CAL
RMS CAL
FILT CAL
PJIT CAL
PWR RESET (LED ON LEFT SIDE OF DISPLAY)
POWER (LED ON RIGHT SIDE OF DISPLAY)
NEXT TEST (FLASHING)

4.3.0 PRE-TEST CONDITIONING

NOTE: A SHORT BEEP WILL SOUND IF A KEY INPUT IS ACCEPTED AND A LONG BEEP IF IT IS NOT ACCEPTED.

4.3.1 PRESS AND VERIFY IN ORDER THE FOLLOWING:

PRESS	VERIFY
900 OHM	SHORT BEEP-LED ON
BRDG	" " " "
ATRMT	" " " "
900 OHM	SHORT BEEP-LED OFF
BRDG	" " " "
ATRMT	" " " "
DIAL (RECEIVE PORT A)	SHORT BEEP-LED ON
DIAL (RECEIVE PORT A)	SHORT BEEP-LED OFF
DIAL (RECEIVE PORT A)	SHORT BEEP-LED ON
HOLD (RECEIVE PORT A)	SHORT BEEP-LED ON (DIAL LED SHOULD BE OFF)
HOLD (RECEIVE PORT A)	SHORT BEEP-LED OFF
DIAL (RECEIVE PORT A)	SHORT BEEP-LED ON
DIAL (TRANSMIT PORT B)	SHORT BEEP-LED ON (RECEIVE PORT A IS NO LONGER ON I.E. IT SHIFTS TO DIAL TRANSMIT PORT B)
HOLD (TRANSMIT PORT B)	SHORT BEEP-LED ON (DIAL TRANSMIT PORT B SHOULD BE OFF.
HOLD (TRNSMIT PORT B)	SHORT BEEP-LED OFF
BAUD RATE	DISPLAY READS 1200. BAUD (1200 IS FLASHING, BAUD IS NOT FLASHING))
1 (ENTRY)	SHORT BEEP DISPLAY READS 110 BAUD
2 (ENTRY)	SHORT BEEP-DISPLAY READS 300 BAUD
3 (ENTRY)	SHORT BEEP--DISPLAY READS 1200 BAUD
ENTER	DISPLAY FLASHES NEXT TEST.

4.4.0 LEVEL FREQUENCY, MANUAL SWEEP

4.4.1 REFER TO FIGURE 5.1.

4.4.2 SET DAVEN TO 0DB. use 3551

4.4.3 SET THE FLUKE TO READ DBM, 600 OHMS, AUTO, AC.

4.4.4 PRESS THE FOLLOWING KEYS ON THE 809A:

"DIAL" RECEIVE PORT A
"LEV/FREQ"
"1"
"0"
"ENTER"
"TONE"
"ENTER"
"1"
"0"
"0"
"4"
"ENTER"
"1"
"0"
"4"
"ENTER"
"2"
"0"
"4"
"ENTER"
"2"
"0"
"4"
"8"
"ENTER"
"4"
"0"
"0"
"0"
"ENTER"
"4"
"0"
"8"
"0"
"ENTER"
"4"
"0"
"8"
"0"
"ENTER"
"4"
"0"
"9"
"6"
"ENTER"

"7"
"5"
"0"
"0"
"ENTER"
"1"
"0"
"2"
"4"
"0"
"ENTER"
"1"
"5"
"0"
"0"
"0"
"ENTER"
"2"
"0"
"0"
"0"
"0"
"ENTER"
"SET REF"
"SET REF"
"EXEC"

4.4.5 THE HP 5300A COUNTER SHOULD READ 1004 Hz +/-1 Hz.

4.4.6 THE FLUKE SHOULD INDICATE 10.0 dBm +/- 0.1 dB.

4.4.7 THE 809A SHOULD DISPLAY WITHIN +/- 1 Hz OF THE COUNTER AND +/- 0.1 dB OF THE FLUKE.

4.4.8 OBSERVE THE FOLLOWING ON THE 809A.

MEASUREMENT IN PROGRESS IS FLASHING, CKT LOSS (STATUS) IS FLASHING, AND 1004 TONE LED IS ON.

4.4.9 PRESS "VOL UP" SEVERAL TIMES AND NOTE INCREASE IN SPEAKER VOLUME. SHORT PORT A CUFF-LINK TERMINALS (FRONT LEFT) AND LISTEN FOR TONE CHANGE IN 809A SPEAKER. SHORT PORT B CUFF-LINK TERMINALS. THERE SHOULD BE NO TONE CHANGE. PRESS "VOL DOWN" UNTIL SOUND IS GONE.

4.4.10 SET DAVEN FOR 10 DB LOSS.

4.4.11 VERIFY 809A READS 1004 HZ 0.0 DBM +/-0.1 DB.

4.4.12 PRESS 809A RECEIVE/TRANSMIT KEY. THE 809A TRANSMIT DISPLAY LED SHOULD BE LIT AND DISPLAY READS 10.0 DBM. PRESS RECEIVE/TRANSMIT TO RETURN TO RECEIVE. (TRANSMIT DISPLAY LED OFF).

4.4.13 SET DAVEN AND VERIFY THE FOLLOWING:

DAVEN	VERIFY 809A READS
30 DB LOSS	-20 DB +/- 0.1 DB.
40 DB LOSS	-30 DB +/- 0.2 DB.
50 DB LOSS	-40 DB +/- 0.2 DB.
60 DB LOSS OR GREATER	-50 DB +/- 0.2 DB OR RCVR-UNDER

4.4.16 REPEAT PROCEDURE 4.4.4.

4.4.17 SET DAVEN TO 29 DB LOSS AND STEP THROUGH FREQUENCIES BY PRESSING "SWP HLD/STP" KEY FOR EACH FREQUENCY (NOTE 5 SECOND DELAY BETWEEN FREQUENCIES). VERIFY THE FOLLOWING:

FREQ	DISPLAYED FREQ	809 LEVEL READS	TRACKS 809A COUNTER
104, 204, 1004, 2048, 4000 HZ	+/-1 HZ	-19 +/-0.2 DBM	+/-1 HZ
4080, 4090, 4096, 7500, 15000, AND 20000 HZ	+/-7 HZ	-19 +/-0.5 DBM	+/-1 HZ

4.4.18 PRESS THE "SWP/HOD/STP" KEY, STOP AT 1004 Hz.

4.4.19 SET DAVEN FOR 59.5 dB. VERIFY THE 809A READS -49.5 +/- 0.2 dB. THIS IS THE REFERENCE. STEP THROUGH FREQUENCIES AND VERIFY THEY READ REF +/- 0.2 dB FROM 100 Hz TO 4000 Hz AND REF +/- 0.5 dB FROM 4000 Hz TO 20KHz.

4.4.20 PRESS 809A LEV/FREQ KEY AND VERIFY THE TONE FREQ RESP PRINTOUT ON THE ADM3.

4.4.21 PRESS 809A "LEV/FREQ" AND "DISP STP" KEY.

4.4.22 VERIFY THE 809A DISPLAY AFTER TEST OPERATION BY PRESSING "DISP STP" KEY FOR EACH FREQUENCY. COMPARE TO ADM3 PRINTOUT.

4.4.23 VERIFY FREQUENCY AND LEVEL ARE WITHIN +/- 1 Hz AND +/- 0.1 dBm RESPECTIVELY.

4.4.24 PRESS THE "LEV/FREQ" KEY ON THE 809A.

4.4.25 VERIFY NEXT TEST IS SHOWN ON THE 809A DISPLAY. (NOTE - FROM 10kHz TO 20kHz THE DIFFERENCE CAN BE A MAXIMUM OF 5 Hz.

4.5.0 LEVEL/FREQUENCY, AUTO SWEEP

4.5.1 SET DAVEN TO 0.00 DB.

4.5.2 PRESS THE FOLLOWING KEYS ON THE 809A:

"LEV/FREQ"
"0"
"ENTER"
"SLOPE"
"ENTER"
"AUTO"
"ENTER"
"ENTER"
"SET REF"
"EXEC"

4.5.3 VERIFY MOMENTARY DISPLAY OF SLPE TEST AND THEN 1004 HZ, 0.0 DBM.

4.5.4 PRESS "SWP/HLD/STP" KEY AND VERIFY 809A AUTOMATICALLY SWEEPS 404, 1004 AND 2804 HZ +/- 2 HZ. LEVEL SHOULD READ 0.0 +/- 0.2 DBM. FREQ/RESP (STATUS) LED SHOULD BE FLASHING.

4.5.5 PRESS LEV/FREQ KEY. VERIFY SLOPE PRINTOUT ON THE ADM3.

4.5.6 PRESS THE FOLLOWING KEYS ON THE 809A:

"LEV/FREQ"
"ENTER"
"SWP B"
"ENTER"
"ENTER"
"ENTER"
"SET REF"
"EXEC"

4.5.7 VERIFY MOMENTARY DISPLAY OF SWP B TEST AND THEN 1004 HZ, 0.0 DBM.

4.5.8 PRESS 809A "SWP/HLD/STP" KEY. VERIFY AUTO SWEEP FROM 205 TO 4004 HZ IN 100 HZ STEPS +/- 2 HZ EXCEPT 2604 HZ, THE LEVEL SHOULD READ 0.0 +/- 0.2 DBM THROUGHOUT SWEEP.

4.5.9 PRESS LEV/FREQ KEY. VERIFY SWP B PRINT OUT ON ADM 3.

4.5..10 PRESS THE FOLLOWING KEYS ON THE 809A:

"DIAL" TRANSMIT PORT B
"LEV/FREQ"
"ENTER"
"SWPC"
"ENTER"
"2"
"0"
"0"
"4"

"ENTER"
"4"
"2"
"0"
"4"
"ENTER"
"1"
"0"
"0"
"0"
"ENTER"
"ENTER"
"DIST"
"ENNTER"
'SET REF'
"EXEC"

NOTE DISPLAY SEQUENCE SWP C TEST THEN SET REF, FINALLY 1004 HZ, 0.0 DBM.

4.5.11 SET DAVEN TO 10 DB LOSS. VERIFY 809A LEVEL CHANGES TO -10 DBM.

4.5.12 PRESS 809A "SET REF" KEY. NOTE MOMENTARY DISPLAY OF REF SET THEN 1004 HZ, 0.0 DB WITH ATTN/DIST LED FLASHING.

4.5.13 REPEAT PROCEDURE 4.9. VERIFY TONE CHANGE IN PORT B AND NO TONE CHANGE IN PORT A.

4.5.14 PRESS 809A "SWP/HLD" KEY. VERIFY A SWEEP FROM 204 TO 3204 HZ +/-1 HZ, +/- 0.1 DB.

4.5.15 PRESS 809A "SWP/HLD/STP". VERIFY 809A SWEEP HOLDS AT CURRENT FREQUENCY. THE LEVEL SHOULD CHANGE TO -10 WHEN DAVEN IS SET 0 dB LOSS AND TO +10, +20 DB WHEN DAVEN IS SET TO 20 AND 30 dB LOSS RESPECTIVELY.

4.5.16 SET DAVEN TO 0 DB. PRESS 809A "SWP/HLD/STP" KEY. VERIFY 809A WILL DISPLAY -10 DB +/-0.1 THROUGHOUT SWEEP.

4.5.16 PRESS 809A LEV/FREQ. KEY. VERIFY ADM3 PRINTOUT (SWEEP ATTN DIST).

4.6.0 NOISE (NOISE FILTERS)

4.6.1 REFER TO FIGURE 5.2.

4.6.2 TURN ON THE BRADLEY.

4.6.3 SET ALL THE SWITCHES TO OFF POSITION ON THE BRADLEY.

4.6.4 SET BRADLEY SIGNAL SOURCE SWITCH TO INTERNAL TONE FREQUENCY AND VERNIER TO 1000 HZ. SET THE BRADLEY OUTPUT LEVEL TO -10.0 dBm.

4.6.5 PRESS THE FOLLOWING KEYS ON THE 809A:

"NOISE"
"ENTER"
"SET REF"
"EXEC"

THE 809A SHOULD DISPLAY 80 dBrn +/-1 dBrn.

4.6.6 SET BRADLEY TONE FREQUENCY VERNIER FOR 300 HZ. THE 809A SHOULD DISPLAY 64 +/-2 dBrn.

4..6.7 SET BRADLEY TONE FREQUENCY VERNIER TO 3000 HZ. THE 809A SHOULD DISPLAY 77 +/-2 dBrn.

4.6.8 VERIFY NOISE (STATUS) LED IS FLASHING. PRESS "NOISE". VERIFY ADM3, NOISE NOTCH OUT C-MSG PRINT OUT.

4.6.9 PRESS THE FOLLOWING KEYS ON THE 809A:

"NOISEE"
"3 KHZ"
"ENTER"
"SET REF"
"EXEC"

VERIFY 809A DISPLAY READS 77 +/-1 dBrn FOR 3000 HZ. PRESS NOISE, VERIFY ADM3, NOISE 3 KHZ NOTCH OUT PRINT OUT.

4.6.10 PRESS THE FOLLOWING KEYS ON THE 809A:

"NOISE"
"PROG"
"ENTER"
"SET REF"
"EXEC"

VERIFY 809A DISPLAY READS 80 +/- 2 dBrn FOR 1000 Hz; 67.8 +/- 2 dBrn FOR 300 Hz AND .86 +/- 2 dBrn FOR 3000 Hz.

4.6.11 PRESS NOISE. VERIFY ADM3, NOISE PROG NOTCH OUT PRINT OUT.

4.6.12 SET THE WAVETEK TO 15 KHZ, AND ITS AMPLITUDE TO MINIMUM, ATTENUATION (dB) TO 0.

4.6.13 REFER TO FIGURE 5.3.

4.6.14 SET THE SIGNAL SOURCE KNOB TO EXT TONE 600 OHM ON THE BRADLEY.

4.6.15 PRESS THE FOLLOWING KEYS ON THE 809A:

"NOISE"
"15 KHZ"
"ENTER"
"SET REF"
"EXEC"

VERIFY 809A DISPLAY READ 67 +/- 1 DBRN. -20db

4.6.16 PRESS NOISE VERIFY ADM3, NOISE 15 KHZ NOTCH OUT PRINTOUT.

4.6.17 DISCONNECT THE WAVE TEK SIGNAL THAT GOES TO THE BRADLEY AND SET THE SIGNAL SOURCE BACK TO INTERNAL TONE FREQUENCY.

4.6.18 REFER TO FIGURE 5.4.

4.6.19 SET THE BRADLEY TONE FREQUENCY TO 1000 Hz.

4.6.20 PRESS THE FOLLOWING KEYS ON THE 809A:

"NOISE"
"N/G"
"ENTER"
"SET REF"
"EXEC"

VERIFY 809A DISPLAY READS 86 +/- 2 DBRN. 0db=56dbrm

4.6.21 PRESS NOISEKEY AND VERIFY TONE ADM 3 NOISE NOTCH OUT PRINT OUT.

4.7.0 NOISE/TONE (1010 HZ NOTCH FILTER)

4.7.1 REFER TO FIGURE 5.1.

4.7.2 PRESS THE FOLLOWING KEYS ON THE 809A:

"NOISE/TONE"
"ENTER"
"ENTER"
"SET REF"
"EXEC"

CAREFULLY ADJUST BRADLEY TONE FREQUENCY VERNIER AROUND 1000 HZ FOR MAXIMUM 809A LEFT HAND DISPLAY INDICATION GREATER THAN 50 DB AND MINIMUM RIGHT HAND DISPLAY OF LESS THEN 30 DBRN.

4.7.3 THE SUM OF NUMERICAL VALUES SHOULD EQUAL 80 +/- 1 dBrn WITH NOISE/TONE (STATUS) LED FLASHING. (EXAMPLE: 56 DB +24 DBRN)=80). -10db

4.7.4 PRESS 809A DISPLAY STEP KEY. VERIFFY FREQUENCY BETWEEN 990 AND 1030 HZ.

4.7.5 SET THE BRADLEY TONE FREQUENCY TO 995 HZ. PRESS 809A DISPLAY STEP KEY. VERFIFY 809A LEFT HAND DISPLAY SHOULD READ AT LEAST 50 dB.

4.7.6 PRESS THE 809A P/AR KEY. VERIFY ADM3, NOISE/TONE, C MESSAGE PRINTOUT.

4.8.0 PEAK TO AVERAGE RATIO: P/AR

4.8.1 REFER TO FIGURE 5.5. SET BRADLEY CONTROLS AS FOLLOWS:

- TOGGLE SWITCH	ALL OFF
- SIGNAL SOURCE	EXT TONE
- SOURCE IMPEDANCE	600 OHM
- OUTPUT LEVEL	0.0 DBM
- TONE FREQUENCY	1000 HZ

4.8.3 PRESS THE FOLLOWING KEYS ON THE 809A:

"P/AR"
"+/-"
"1"
"0"
"ENTER"
"SET REF"
"EXEC"

4.8.4 CONNECT THE XMTR OF THE 809A TO THE EXT TONE 0 DBM, 600 OHMS OF THE BRADLEY.

4.8.5 VERIFY THAT THE 809A DISPLAY READS 100 PAR +/-2 PAR AND P/AR (STATUS) LED SHOULD BE FLASHING. jumper port A to port B

4.8.6 SWITCH BRADLEY SIGNAL SOURCE SWITCH TO ITS INTERNAL (1000 HZ) TONE FREQUENCY.

4.8.7 VERIFY THAT THE 809A DISPLAY READS -50 +/-4 PAR UNITS.

4.8.8 PRESS PHASE/JITT KEY ON THE 809A. VERIFY P/AR PRINTOUT ON ADM3.

4.8.9 RETURN BRADLEY SIGNAL SOURCE SWITCH TO EXT TONE.

4.8.10 DISCONNECT THE 809A TRANSMITTER AND RECEIVER.

4.8.11 CONNECT THE AXEL LINE SIMULATOR INPUT TO THE 809A XMTR.

4.8.12 CONNECT THE AXEL LINE SIMULATOR OUTPUT TO THE RCVR OF THE 809A.

4.8.13 PRESS THE FOLLOWING KEYS ON THE 809A:

"P/AR"
"ENTER"
"SET REF"
"EXEC"

4.8.14 SET THE AXEL LINE SIMULATOR LINE SELECTOR TO C1, C2 AND C4, ONE AT A TIME.

4.8.15 THE 809A SHOULD READS 59 +/- 2 PAR, 85 +/-2 PAR, AND 91 +/-2 PAR RESPECTIVELY.

PRESS THE FOLLOWING KEYS ON THE 809A:

"P/AR"
"P/AR"
"+/-"
"2"
"0"
"ENTER"
"SET REF"
"EXEC"

4.8.16 REPEAT PROCEDURE 4.8.14 AND 4.8.15.

4.9.0 PHASE JITTER

4.9.1 DISCONNECT THE 809A XMTR FROM THE AXEL LINE SIMULATOR.

4.9.2 DISCONNECT THE 809A RCVR FROM THE AXEL LINE SIMULATOR.

4.9.3 CONNECT THE 809A XMTR TO THE EXT TONE ON THE BRADLEY.

4.9.4 CONNECT THE 809A RCVR TO THE BRADLEY OUTPUT.

4.9.5 PRESS THE FOLLOWING KEYS ON THE 809A:

"PHASE/JITT"
"PHASE/JITT"
"ENTER"
"ENTER"
"SET REF"
"EXEC"

4.9.6 VERIFY 809A DISPLAY OF PJIT-TEST THEN 1004 HZ, 0.0 DEG +/- 0.2 DEG AND PHASE/JITT (STATUS) LED IS FLASHING.

4.9.7 SET THE BRADLEY AS FOLLOWS

- SWITCH BRADLEY PHASE MODULATION TOGGLE SWITCH TO ON.
- SET MODULATION FREQUENCY TO 100 HZ.
- SET THE MODULATION FREQUENCY MULTIPLIER TO X1.
- SET THE PHASE MODULATION DEGREE TO 90 DEGREE.

4.9.8 VERIFY 809A DISPLAY READS 1004 Hz, 90 DEG +/- 4.7 DEG.

4.9.9 PRESS IMPULSE COUNT KEY.

4.9.10 VERIFY PHASE JITT STD PRINTOUT ON ADM3.

4.9.11 SET BRADLEY PHASE MODULATION TOGGLE SWITCH TO OFF.

4.10.0 IMPULSE COUNT

4.10.1 PRESS THE FOLLOWING KEYS ON THE 809A. (1 NOTE SEQUENCE, IMPULSE MEASUREMENTS, LEDS LIGHT AS EACH OF THE FOLLOWING IS SELECTED.

"IMPULSE COUNT"
"ENTER"
"7"
"0"
"ENTER"
"ENTER"
"8"
"ENTER"
"4"
"ENTER"
"2"
"0"
"ENTER"
"0"
"ENTER"
"SET REF"
"EXEC"

4.10.2 VERIFY 809A DISPLAYS IMP-TEST THEN 0 MIN CONT FOR 1 MINUTE +/- 3 SECONDS. IMPULSE (STATUS) LED SHOULD BE FLASHING.

4.10.3 PRESS 809A DISPLAY/STEP KEY. VERIFY DISPLAY OF 0 GAIN, 0 DROP.

4.10.4 SET UP THE BRADLEY AS FOLLOWS:

- SET THE BRADLEY HIT INTERVAL CONTROL TO 1 SECOND.
- SET THE BRADLEY HIT DURATION TO 10 MS.
- SET THE BRADLEY HITRISE TIME TO 2 MS.
- SET THE BRADLEY HIT AMPL TO 0 DB.
- SET BRADLEY GAIN HIT AMPL TOGGLE SWITCH TO ON.

4.10.5 INCREASE THE GAIN HIT AMPL UP TO 4 DB.

4.10.6 VERIFY 809A DISPLAYS GAINS AT 4 DB.

4.10.7 INCREASE THE GAIN HIT AMPL UP TO 12 DB.

4.10.8 VERIFY 809A DISPLAYS DROPS COUNT AT 12 DB +/- 1 DB AND NOTE THAT DROPS INHIBITS GAINS.

4.10.9 SET BRADLEY GAIN HIT TOGGLE SWITCH TO OFF.

4.10.10 RETURN GAIN HIT AMPL VERNIER TO 0 DB.

4.10.11 PRESS 809A DISPLAY/STEP KEY.

4.10.12 VERIFY A DISPLAY OF 0PHAS.

4.10.13 SET BRADLEY PHASE HIT AMPL TO 0 DEGREE AND TOGGLE SWITCH TO ON.

4.10.14 INCREASE THE PHASE HIT AMPL UP TO 20 DEGREES.

4.10.15 THE 809A SHOULD COUNT PHASE HITS AT 20 DEGREES +/- 4 DEGREES.

4.10.16 SET BRADLEY PHASE HIT TOGGLE SWITCH TO OFF.

4.10.17 RETURN PHASE HIT AMP TO 0.

4.10.18 PRESS 809A DISPLAY/STEP KEY, VERIFY A DISPLAY OF X HIGH, XMID.

4.10.19 SET BRADLEY IMPUSE LEVEL TO 70.0 DBRN AND TOGGLE SWITCH TO ON.

4.10.20 INCREASE THE IMPULSE LEVEL. VERNIER UP TO 8 DB.

4.10.21 THE 809A SHOULD COUNT MID'S AT 8 DB.

4.10.22 INCREASE THE IMPULSE LEVEL VERNIER UP TO 12 DB.

4.10.23 THE 809A SHOULD COUNT HIGHS AT 12 DB.

4.10.24 PRESS 809A DISPLAY STEP KEY, VERIFY DISPLAY OF XLOW.

4.10.25 DECREASE THE IMPULSE LEVEL VERNIER DOWN TO 4 DB.

4.10.26 THE 809A SHOULD COUNT LOWS AT 4 DB.

4.10.27 NOTE THAT THE 809A WILL ROTATE THROUGH ALL IMPULSE TESTS BY REPEATEDLY PRESSING DISPLAY/STEP.

4.10.28 SET IMPULSE LEVEL TOGGLE SWITCH TO OFF.

4.10.29 PRESS 809A'S INTERMOD KEY.

4.10.30 VERIFY IMPULSE COUNT PRINT OUT ON ADM3.

4.11.0 INTERMODULATION

4.11.1 SET BRADLEY AS FOLLOWS:

SECOND HARMONIC	10%
THIRD HARMONIC	1%
EVEN ORDER -	NORMAL
2ND	ON
3RD+	+
3RD	ON
FREQUENCY TRANSLATION	OFF (ON-OFF SWITCH)

4.11.2 REFER TO FIGURE 5.6.

4.11.3 PRESS THE FOLLOWING KEYS ON THE 809A:

"INTERMOD"
"ENTER"
"ENTER"
"SET REF"
"EXEC"

odb = 762nd4
793rd4

4.11.4 VERIFY 809A DISPLAYS MOMENTARY IMODTEST THEN 20 2NDU 40 3RDU +/-1DB WITH INTERMOD 4-TONE (STATUS) FLASHING.

4.11.5 PRESS 809A "DISP STP" KEY.

4.11.6 VERIFY THE 809A DISPLAY (FLASHING) PUSH IMCK.

4.11.7 PRESS 809A IMCHECH KEY. NOTE MOMENTARY DISPLAY OF IMOD NSE THEN 733 2nDN +/-4DB 73 3rdn DN +/- 4dB WITH INTERMOD CHECK STATUS FLASHING.

4.11.8 PRESS 809A "DISP STP" KEY.

4.11.9 VERIFY 809A DISPLAY CHANGES TO 20 2nDC; 40 3rDC +/- 2 DB. PRESS 809A INTER MOD KEY. VERIFY ADM3 IMODDST PRINTOUT.

4.11.10 PRESS THE FOLLOWING KEYS ON THE 809AA.

"INTERMOD"
"ENTER"
"AUTO"
"ENTER"
"SET REF"
"EXEC"

4.11.11 VERIFY 809A DISPLAY 20 2nDU, 40 3rDU +/-2 DB WITH INTERMOD 4-TONES (STATUS) LED FLASHING.

4.11.12 PRESS THE 809A SWP/HLD KEY. OBSERVE THE 809A DISPLAY SEQUENCE.

SGNL CHNG IMOD NSE 20 2nDC, 40 3rDC +/- 2 dB.

4.11.13 VERIFY 809A INTERMODCHK LED IS FLASHING.

4.11.14 PRESS MEAS. VERIFY ADM3 IMOD DST PRINTOUT.

4.12.0 ENV DELAY DISTORTION

4.12.1 REFER TO FIGURE 5.7. SET THE AXEL LINE TO 3002.

4.12.2 PRESS THE FOLLOWING KEYS ON THE 809A:

"MEAS"
"ENTER"
"SWPA"
"ENTER"
"AUTO"
"ENTER"
"COND"
"ENTER"
"ENTER"
"SET REF"
"EXEC"

4.12.3 VERIFY 809A DISPLAY SEQUENCE.

EDD RTN. MEAS REFSWP HOLDS ON PUSH SWP (FLASHING)

FREQ STEP (FLASHING)

4.12.4 PRESS 809A "SWP/HLD" KEY. NOTE DISPLAY OF 1004 SWP/THEN SWEEPS FROM 304 TO 3204 EDD SWP PUSH SWP.

4.12.5 PRESS 809A "SWP/HLD" KEY AGAIN. VERIFY 809A SWEEPS THROUGH FREQUENCIES DISPLAYING DELAY READINGS (RIGHT SIDE OF DISPLAY).

4.12.6 PRESS "HLD/STP" AT SOME POINT DURING THE ABOVE SWEEP. VERIFY THAT THE 809A HOLDS AT THE FREQUENCY AND STEPS FROM USEC; DB; DBM AND BACK TO USEC BY PRESSING DISPLAY STEP KEY.

4.12.7 PRESS "HLD/STP" TO CONTINUE SWEEPING TO END. VERIFY FAIL 3002 PUSH SWP DISPLAY AND AUTOMATIC DATA LOGGING ON THE ADM3 PRINTOUT.

4.12.8 PRESS THE FOLLOWING KEYS ON THE 809A:

"MEAS"
"MEAS"
"SET REF"

SEQUENCE THROUGH "DISPLAY AFTER TEST" DATA BY PRESSING "DISP/STP" STEP KEY FOR EACH FREQUENCY.

4.12.9 COMPARE DELAY READINGS ON THE 809A DISPLAY AND ADM3 DELAY PRINTOUT TO CHART #1. NOTE TOLERANCES.

4.12.10 SEQUENCE THROUGH A SECOND TIME BY PRESSING DISPLAY STEP KEY. COMPARE ATTN DST READINGS ON 809A DISPLAY AND ADM3 TO CHART NUMBER 1.

FREQ. HZ	DELAY MSEC	ATTEN DST: DB
304	4003 +/-40	12.0 +/-1.0
504	3323 +/-40	4.6 +/-0.5
604	2946 +/-20	2.3 +/-0.5
804	1788 +/-20	-0.3 +/-0.5
1004	759 +/-20	0.0 +/-0.5
1204	281 +/-20	0.4 +/-0.5
1404	80 +/-20	0.7 +/-0.5
1604	0 +/-20	1.1 +/-0.5
1804	2 +/-20	1.7 +/-0.5
2004	82 +/-20	2.4 +/-0.5
2204	284 +/-20	3.5 +/-0.5
2404	691 +/-20	5.3 +/-0.5
2504	1047 +/-20	6.5 +/-0.5
2704	2247 +/-20	7.9 +/-0.5
2804	2782 +/-440	7.9 +/-0.5
3004	3737 +/-40	7.2 +/-1.0
3204	767 +/-40	16.5 +/-1.0

CHART #1

4.12.11 DISCONNECT THE AXEL LINE SIMULATOR AND LOOP THE XMTR BACK TO THE RCVR.

4.12.12 PRESS THE FOLLOWING KEYS ON THE 809A:

"MEAS"
"MEAS"
"ENTER"
"ENTER"
"ENTER"
"ENTER"
"ENTER"
"SET REF"
"EXEC"

4.12.13 PRESS "SWP" KEY WHEN "PUSH/SWP" IS DISPLAYED.

4.12.14 VERIFY 809A SWEEPS THROUGH FREQUENCIES AS PER CHART "1".

4.12.15 PRESS "SWP" WHEN "PUSH/SWP" IS DISPLAYED AGAIN.

4.12.16 VERIFY 809A DISPLAYS THE FOLLOWING:

- 0 USEC AT 304 HZ +/-2 USEC.
- VARIES LESS THAN 30 USEC UP TO 604 HZ.
- VARIES LESS THAN 10 USEC FROM READING AT 604HZ TO 3204HZ.

4.12.17 VERIFY THE ATTN DST ON THE ADM3 PRINTOUT READS 0.0 +/- 0.1 DB.

4.12.18 REFER TO FIGURE 5.8.

4.12.19 DISCONNECT THE ADM3 FROM THE 809A (U.U.T) AND CONNECT IT TO THE 809A (U.N.U.T). SET ADDRESS SWITCH #8 ON U.U.T.

4.12.20 SETT THE ADDRESS SWITCHES ON THE 809A (U.N.U.T) ALL OFF.

4.12.21 PRESS THE FOLLOWING KEYS ON THE 809A (U.N.U.T):

"MEAS"
"ENTER"
"SWPA"
"ENTER"
"AUTO"
"ENTER"
"COND"
"ENTER"
"ENTER"
"SET REF"
"EXEC"

4.12.22 VERIFY THAT THE 809A (U.N.U.T) DISPLAYS THE FOLLOWING:

"EDD TEST"
"RTN MEAS"
"REF SWP"
"HOLD ON"
"PUSH SWP" (FLASHING)

4.12.23 PRESS THE FOLLOWING KEYS ON THE 809A (U.U.T):

"REPEAT"
"REPEAT"
"ENTER"
"1004"
"ENTER"
"SET REF"
"EXEC"

4.12.24 VERIFY 809A (U.U.T) DISPLAY MOMENTARILY
EDD --- RTN REPT
SET REF, THEN DISPLAY 1004 Hz, SWP1.

4.12.25 PRESS THE "SET REF" KEY ON THE 809A (U.U.T).

4.12.26 PRESS THE "PUSH SWP" KEY ON THE 809A (U.N.U.T).

4.12.27 VERIFY 809A (U.N.U.T) DISPLAY 1004 Hz, SWP1.

4.12.28 VERIFY 809A (U.U.T) SWEEP FROM 304 Hz TO 3204 Hz ON LEFT DISPLAY AND X dBm ON RIGHT DISPLAY.

4.12.29 VERIFY 809A (U.U.T) DISPLAY 1004 Hz, -XdBm AFTER THE LAST SWEEPING FREQUENCY (3204).

4.12.30 VERIFY 809A (U.N.U.T) DISPLAY FAIL 3002 MOMENTARILY, PUSH SWP (FLASHING).

4.12.31 PRESS "SWP/HLD" ON THE 809A (U.N.U.T).

4.12.32 VERIFY 809A (U.N.U.T) SWEEP FROM 304 Hz TO 3204 Hz ON THE LEFT DISPLAY, AND THE RIGHT DISPLAY READS X.M.SEC. (DELAY).

4.12.33 VERIFY 809A (U.U.T) SWEEP FROM 304 Hz TO 3204 Hz ON THE LEFT DISPLAY, AND THE RIGHT DISPLAY READS X dBm.

4.12.34 VERIFY 809A (U.N.U.T) DISPLAY 3002 FAIL THEN HOLD ON "PUSH/SWP" (FLASHING).

4.12.35 COMPARE DELAY READING ON THE 809A (U.N.U.T) DISPLAY AND THE ADM3 DELAY PRINTOUT TO CHART #1. NOTE TOLERANCE.

4.12.36 SEQUENNCE THROUGH A SECOND TIME BY PRESSING THE "SET REF" KEY. COMPARE ATTN DIST READINGS ON THE 809A (U.N.U.T) AND ADM3 TO CHART #1.

4.12.37 DISCONNECT ADM3 FROM THE 809A (U.N.U.T) AND CONNECT IT TO THE 809A (U.U.T). SET ADDRESS SWITCH #8 OFF.

4.13.0 FINAL CHECK

4.13.1 PRESS THE FOLLOWING KEYS ON THE 809A:

"LEV/FREQ"
"PORT SWAP A TRM"
"RCVR (TERM) BRDG" (VERIFY BOTH LEDS ARE ON)
"LEV/FREQ"
"ENTER"
"1004"
"ENTER"
"SET REF"
"EXEC"

4.13.2 CONNECT 809 TRANSMITTER TO ITS RECEIVER. VERIFY CKTL TEST WILL DISPLAY MOMENTARILY. THEN DISPLAYS 1004 +/- 1 Hz; 6.0 +/- 0.1 dBm.

4.13.3 DISCONNECT 809A PORT B. VERIFY 809A DISPLAYS RCVR URNG.

4.13.4 RECONNECT PORT B.

4.13.5 PRESS 809A LEV/FREQ KEY.

4.13.6 VERIFY "NEXT TEST" FLASHES AFTER ADM3 CKT LOSS PRINTOUT.

4.13.7 PRESS THE FOLLOWING KEYS ON THE 809A:

"PORT SWAP A TRMT"
"BRDG" (RCVR-TERM)

4.13.8 VERIFY LEDS ARE OFF.

4.13.9 PRESS 900 ohm AND VERIFY LED IS ON.

4.13.10 PRESS THE FOLLOWING KEYS ON THE 809A:

"LEV/FREQ"
"ENTER"
"ENTER"
"SET REF"
"EXEC"

4.13.11 VERIFY THE 809A DISPLAY READS 1004 Hz +/- 1 Hz, 0.0 dBm +/- 0.1 dBm.

4.13.12 PRESS "LEV/FREQ" ON THE 809A. VERIFY "NEXT TEST" FLASHES.

4.13.13 PRESS 900 ohm. VERIFY LED IS OFF.

4.13.14 VERIFY CKTL PRINTOUT ON THE ADM3.

4.13.15 SET 809A ADDRESS RS232C PRINTER SWITCH #8 ON (UP). OTHERS SHOULD BE DOWN.

REVISIONS

SYM	DESCRIPTION	DATE	APPROVED
A	PRODUCTION RELEASE	6/16/82	

NEXT ASSY.	QTY	MODEL NO.
		809A

Sierra

LEAR SIEGLER, INC.
SIERRA ELECTRONIC DIVISION
MENLO PARK, CALIFORNIA 94025

CODE IDENT. NO. 54778

809A UNIT CLAIBRATION PROCEDURE, ENG.

DATE	SIZE	DRAWING NO.	REV
6/16/82	A	A03456400	A

BY: G. Porter

APPV'D:

STOCK AS

SHEET 1 OF 30

671-14-1

TABLE OF CONTENTS

SECTION DESCRIPTION

1.0 SCOPE

2.0 APPLICABLE DOCUMENTS

3.0 REQUIREMENTS

4.0 CALIBRATION PROCEDURE

4.1 A-1 PWB CALIBRATION

4.1.1 - COMMON MODE ADJUSTMENT
4.1.2 - RECEIVER LEVEL CALIBRATION
4.1.3 - NOTCH FILTER ADJUSTMENT
4.1.4 - DROP OUT DETTECTION FILTER
4.1.5 - GAIN HITS ADJUSTMENT AND DROP OUT ADJUSTMENT
4.1.6 - IMPULSE LEVEL THRESHOLD

4.2 A-2 PWB CALIBRATION

4.2.1 - SINE WAVE CALIBRATION
4.2.2 - ENVELOPE DELAY TRANSMIT ADJUSTMENT
4.2.3 - FOUR TONE GENERATOR

4.3 A-3 PWB CALIBRATION

4.3.1 - NON-LINEAR DISTORTION SECOND AND THIRD ORDER
4.3.2 - ENVELOPE DELAY FILTER ADJUSTMENT
4.3.3 - PAR RECEIVER
4.3.4 - NON-LINEAR SECOND ORDER LEVEL ADJUSTMENT
4.3.5 - PHASE JITTER FILTER
4.3.6 - P/AR XMTR

5.0 APPENDIX

5.1 - BANDPASS FILTER CALIBRATIONS
5.2 - BRADLEY SET-UP NO. 1
5.3 - BRADLEY SET-UP NO. 2
5.4 - ILLUSTRATIONS

1.0 - SCOPE

THIS CALIBRATION PROCEDURE PROVIDES INFORMATION FOR CALIBRATING THE A1, A2, AND A3 BOARDS OF THE 809A.

2.0 - APPLICABLE DOCUMENTS

DESCRIPTION	DRAWING NUMBER
SCHEMATIC	A1 - D03331400
	A2 - D03331900
	A3 - D03332400
L/M	A1 - A03331000
	A2 - A03331500
	A3 - A03332000
ARTWORK	A1 - D03331300
	A2 - D03331800
	A3 - D03332300

3.0 - REQUIREMENTS

- HP3325A (SYNTHESIZER/FUNCTION GENERATOR) OR EQUIVALENT
- HP3455A (DIGITAL VOLTMETER) OR EQUIVALENT
- WAVETEK MODEL 171 OR EQUIVALENT
- BRADLEY MODEL 2B OR EQUIVALENT
- TWO 310 TO BANANA CABLES
- FLUKE (8920A) TRUE RMS VOLTMETER OR EQUIVALENT
- SPECTRUM ANALYZER HP3582A OR EQUIVALENT
- EPROMS #3 AND #7 LABELED V1060 (CAL PROMS).

4.0 CALIBRATION PROCEDURES

REFER TO SECTION 5.0 FOR THE COMMONLY USED CALIBRATION PROCEDURES, EQUIPMENT SET-UP PROCEDURES AND TEST SET-UP ILLUSTRATIONS.

4.1 - A-1 PWB CALIBRATION

4.1.1 - COMMON MODE ADJJUSTMENT

4.1.1.1 - REFER TO FIGURE 5.1 FOR BOARD INTERCONNECTIONS.

4.1.1.2 - (A4) - SET THE ADDRESS SWITCH ON THE A4 BOARD AS FOLLOW, 1 TO 9 ARE ON ,AND 10 IS OFF. S1 SHOULD BE SWITCHED TOWARD S2.

4.1.1.3 - (A4) - CHANGE EPROMS #3 AND #7 WITH EPROMS #3 AND #7 LABELED V1060 (CAL PROMS).

4.1.1.4 - TURN ON THE POWER FOR ALL INSTRUMENTS.

4.1.1.5 - TURN ON THE 809A POWER SUPPLY. WAIT FOR THE UNIT TO GO THROUGH ITS SELF-CALIBRATION.

4.1.1.6 - VERIFY THE 809A DISPLAY (NEXT TST) (FLASHING).

4.1.1.7 - (A9) - SET THE ADDRESS SWITCHES ON THE A8 BOARD AS FOLLOWS: SWITCH #8 SHOULD BE ON. THE REST ARE OFF.

4.1.1.8 - (809A) - PRESS THE FOLLOWING KEYS ON THE KEYBOARD:

- "LEV/FREQ"
- "ENTER"
- "ENTER"
- "SET REF"
- "EXEC"

4.1.1.9 - (HP3325) - SET THE FREQUENCY SYNTHESIZER (HP3325A) TO 400 Hz AND A LEVEL OF 10 VOLTS P_P.

4.1.1.10 - (809A) - ADJUST R175 UNTIL THE LEVEL READING ON THE 809A IS MINIMUM.

4.1.1.11 - DISCONNECT THE CIRCUIT IN FIGURE 5.1. AND CONNECT THE CIRCUIT IN FIGURE 5.2.

4.1.1.12 - (809A) - PRESS THE FOLLOWING KEYS:

- "NOISE"
- "NOISE"
- "2"
- "ENTER"
- "SET/REF"
- "EXEC"

4.1.1.13 - (809A)- ADJUST R188 UNTIL THE LEVEL READING ON THE 809A IS MINIMUM.

4.1.1.14 - REFER TO FIGURE 5.3.

4.1.1.15 - (809A) - PRESS THE FOLLOWING KEYS ON THE 809A.

"LEV/FREQ"
"LEV/FREQ"
"ENTER"
"TONE"
"ENTER"
"2"
"0"
"ENTER"
"SET/REF"
"SET/REF"
"EXEC"

4.1.1.16 - SET THE HP3325A TO 1004 HZ.

4.1.1.17 - ADJUST THE AMPLITUDE OF THE HP3325A UNTIL THE 809A READS 0.00 DBM,+/- 0.01 DBM.

4.1.1.18 - SET THE HP3325A TO 20 HZ.

4.1.1.19 - ADJUST R214 UNTIL THE 809A READS 0.00 DBM ,+/- 0.01 DBM.

4.1.2 - RECEIVER LEVEL CALIBRATION

4.1.2.1 - (809A) - PRESS THE FOLLWOING KEYS:

- "LEV/FREQ"
- "900 ohms"
- "LEV/FREQ"
- "ENTER"
- "1004"
- "ENTER"
- "SET REF"
- "EXEC"

4.1.2.2 - (HP3325A) - SET THE HP3325A TO 1004 Hz AND SET THE LEVEL SO THAT THE HP VOLTMETER READS 0.9485 VOLTS (AC) +/- 0.0002 VOLTS (AC).

4.1.2.3 - (809A) - ADJUST R93 UNTIL THE 809A READS 0.00 dBm +/- 0.01 dBm.

4.1.3 - NOTCH FILTER ADJUSTMENT

4.1.3.1 - REFER TO FIGURE 5.3.

4.1.3.2 - (HP3325) - SET THE HP3325A TO 1010 Hz WITH A LEVEL OF 500 MV RMS.

4.1.3.3 - (SCOPE) - CONNECT A SCOPE PROBE AT TP15, THEN ADJUST R197 UNTIL YOU GET A MINIMUM SIGNAL LEVEL ON THE SCOPE.

4.1.3.4 - DISCONNECT THE SIGNAL THAT HAD BEEN FED TO THE UNIT FROM THE PREVIOUS PROCEDURE AND FEED A SIGNAL OF 1000 Hz WITH A LEVEL OF 1 VOLTS P_P AT PIN 3 OF U46.

4.1.3.5 - (SCOPE) - CONNECT SCOPE PROBE AT TP16, ADJUST R201 UNTIL THE LEVEL OF THE WAVEFORM ON THE SCOPE REACHES MINIMUM.

4.1.3.6 - (HP3325A) - MOVE THE SIGNAL SOURCE TEST CLIP TO PIN 10 OF OF U44.

4.1.3.7 - (HP3325) - SET SIGNAL GENERATOR TO 1020 Hz.

4.1.3.8 - CONNECT SCOPE PROBE AT TP17.

4.1.3.9 - (SCOPE) - ADJUST R205 UNTIL THE AMPLITUDE OF THE WAVEFORM DISPLAY ON THE SCOPE REACHES MINIMUM.

4.1.4 - DROP OUT DETECTION FILTER CALIBRATION

4.1.4.1 - REFER TO FIGURE 5.3.

4.1.4.2 - REFER TO BANDPASS FILTER CALIBRATION, PROCEDURES A, AND B (SECTION 5.0).

4.1.4.3 - (809A) PRESS THE FOLLOWING KEYS:

- "IMPULSE COUNT"
- "900 OHM"
- "IMPULSE COUNT"
- "ENTER"
- "ENTER"
- "ENTER"
- "8"
- "ENTER"
- "4"
- "ENTER
- "2"
- "0"
- "ENTER"
- "0"
- "ENTER"
- "SET REF"
- "EXEC"

4.1.4.4 - ADJUST THE FOLLOWING BANDPASS FILTERS AT EACH FREQUENCY SPECIFIED.

POT	R51	R57	R63	R69
	1063 Hz	950 Hz	1026 Hz	989 Hz

4.1.4.5 - DISCONNET THE CIRCUIT IN FIGURE 5.3.

4.1.5 - GAIN HITS AND DROP OUT ADJUSTMENT

4.1.5.1 - (BRADLEY) - CONNECT THE BRADLEY AS IN FIGURE 5.7.

4.1.5.2 - (809A) - PRESS THE "DISP STEP" KEY ON THE 809A.

4.1.5.3 - TURN ON SWITCH LABELED GAIN HITS ON THE BRADLEY AND ADJUST THE HITS TO 4dB.

4.1.5.4 - TURN UP THE VOLUME ON THE 809A BY PRESSING THE "VOL UP" KEY FIVE TIMES. THE DISPLAY SHOULD STEP ONE GAIN COUNT FOR EACH POP HEARD. IF NOT, ADJUST R47 ON THE A1 BOARD UNTIL THE DISPLAY STARTS COUNTING THE POPS.

4.1.5.5 - INCREASE THE GAIN HITS TO 12dB. THE DROPS COUNT THE DROPS COUNT SHOULD NOW BE COUNTING THE POPS. IF NOT, ADJUST R80 ON THE A1 BOARD UNTIL THE DISPLAY STARTS COUNTING DROPOUTS.

4.1.5.6 - ADJUST THE GAIN HITS UP TO 14dB AND THE GAIN HITS SHOULD STOP COUNTING. BUT THE DROPOUTS WILL CONTINUE TO COUNT. IF NOT, CHECK THE CIRCUIT ON THE A5 BOARD.

4.1.5.7 - TURN OFF GAIN HITS.

4.1.5.8 - (809A)- PRESS THE "DISPLAY STEP" KEY ON THE KEYBOARD.

4.1.5.9 - TURN ON THE PHASE HITS AND INCREASE THE HITS UP TO 20 +/- 2 DEGREES. THE DISPLAY SHOULD COUNT ONE FOR EACH POP.

4.1.5.10 - TURN OFF PHASE HITS.

4.1.5.11 - (809A) - PRESS THE FOLLOWING KEY: "DISPLAY STEP"

4.1.6 - IMPULSE LEVEL THRESHOLD

4.1.6.1 - REFER TO FIGURE 5.4.

4.1.6.2 - (809A) - PRESS THE FOLLOWING KEYS:

- "IMPULSE COUNT"
- "IMPULSE COUNT"
- "9.3"
- "ENTER"
- "ENTER"
- "ENTER"
- "8"
- "ENTER"
- "4"
- "ENTER"
- "2"
- "0"
- "ENTER"
- "0"
- "ENTER"
- "SET REF"
- "EXEC"
- "DISPLAY STEP"
- "DISPLAY STEP"
- "DISPLAY STEP"

4.1.6.3 - (HP3325) - SET TO 1800 Hz WITH AN AMPLITUDE OF -19.0 dBm.

4.1.6.4 - ADJUST R6 ON THE 809A A1 BOARD TILL HIGH IMPULSE DISPLAY STARTS TO COUNT.

4.1.6.5 - (809A) - PRESS THE FOLLOWING KEYS:

- "IMPULSE COUNT"
- "IMPULSE COUNT"
- "ENTER"
- "6"
- "0"
- "ENTER"
- "ENTER"
- "ENTER"
- "ENTER"
- "ENTER"
- "ENTER"
- "SET REF"
- "EXEC"
- "DISPLAY STEP"
- "DISPLAY STEP"
- "DISPLAY STEP"

4.1.6.6 - (809A) - THE HIGH IMPULSE DISPLAY SHOULD STOP COUNTING.

4.2 - A-2 PWB CALIBRATION

4.2.1 - SINE WAVE CALIBRATION

4.2.1.1 - TURN OFF THE 809A.

4.2.1.2 - INTERCHANGE THE A1 POSITION WITH THE A2 POSITION. (PUT THE A2 BOARD ON TOP OF THE A1 BOARD)

4.2.1.3 - TURN ON THE 809A.

4.2.1.4 - WAIT FOR THE UNIT TO DISPLAY NEXT TST (FLASHING).

4.2.1.4 - USE A 310 TO 310 CABLE TO LOOP THE XMTR BACK TO RCVR.

4.2.1.5 - PRESS THE FOLLOWING KEYS ON THE 809A:

- "LEV/FREQ"
- "ENTER"
- "TONE"
- "ENTER"
- "1"
- "0"
- "0"
- "4"
- "ENTER"
- "2"
- "0"
- "4"
- "8"
- "ENTER"
- "1"
- "2"
- "5"
- "0"
- "0"
- "ENTER"
- "SET REF"
- "SET REF"
- "EXEC"

4.2.1.6 - ADJUST R11 UNTIL THE 809A DISPLAY READS 0.0 dBm, +/- 0.01 dBm.

4.2.1.7 - PRESS THE "SWP HLD/STP" KEY ON THE 809A.

4.2.1.8 - ADJUST R16 SO THAT THE 809A READS 2048 Hz +/- 1 Hz.

4.2.1.9 - PRESS THE "SWP HLD/STP" KEY ON THE 809A.

4.2.1.10 - ADJUST R14 SO THAT THE DISPLAY ON THE 809A READS 12500 Hz +/- 2 Hz.

4.2.2 - ENVELOPE DELAY TRANSMIT ADJUSTMENT

4.2.2.1 - PRESS THE FOLLOWING KEYS ON THE 809A:

- "MEAS"
- "MEAS"
- "ENTER"
- "TONE"
- "ENTER"
- "1"
- "8"
- "0"
- "0"
- "ENTER"
- "ENTER
- "SET REF"
- "EXEC"

4.2.2.2 - VERIFY 809A DISPLAY. PUSH SWP1 (FLASHING).

4.2.2.3 - PRESS THE "SWP HLD/STP" KEY ON THE 809A.

4.2.2.4 - PRESS THE "SWP HLD/STP" KEY ON THE 809A.

4.2.2.5 - CONNECT THE HP 3582A SPECTRUM ANALYZER BETWEEN TP3 AND GROUND.

4.2.2.6 - SET THE SPECTRUM ANALYZER AS FOLLOWS:

a. FREQUENCY SPAN TO 25 Hz.
b. SET THE FREQUENCY MODE TO SET CENTER.
c. ADJUST CENTER FREQUENCY TO 83.0 Hz.

4.2.2.7 - ADJUST R39 UNTIL THE PEAK ON THE CENTER OF THE SCREEN GO TO MINIMUM.

4.2.2.8 - DISCONNECT THE SPECTRUM ANALYZER.

4.2.2.9 - CONNECT A SCOPE PROBE BETWEEN TP3 AND GROUND.

4.2.2.10 - ADJUST R36 UNTIL THE WAVEFORM LOOKS LIKE FIGURE 5.5.

4.2.3 - 4-TONE GENERATOR ADJUSTMENT

4.2.3.1 - (809A) - PRESS THE FOLLOWING KEYS:

- "INTER MODE"
- "900 ohms"
- "INTER MODE"
- "ENTER"
- "AUTO"
- "ENTER"
- "SET REF"
- "EXEC"
- "VOLUME KEY UP 3 TIMES" (4 TONES SHOULD BE HEARD)
- "SWP/HLD" (2 TONES SHOULD BE HEARD)
- "900"

4.2.3.2 - DISCONNECT THE SCOPE FROM THE CIRCUIT AND CONNECT THE SPECTRUM ANALYZER TO THE XMTR AND RCVR.

4.2.3.3 - SET THE SPECTRUM ANALYZER CONTROL KEYS AS FOLLOWS:

a. SET THE FREQUENCY SPAN TO 25 Hz.
b. SET THE FREQUENCY MODE TO SET CENTER.
c. ADJUST CENTER FREQUENCY TO 1380 Hz.

4.2.3.4 - TWO PEAKS SHOULD APPEAR ON THE SPECTRUM ANALYZER WITH A LEVEL OF -3.5 DBV, IF NOT, THEN ADJUST R1.

4.2.3.5 - (809A) - PRESS THE "SWP/HLD" KEY.

4.2.3.6 - THE LEVEL OF THE TWO PEAKS SHOULD GO DOWN TO -6.5 DBV, +/- 0.10 BV.

4.2.3.7 - ADJUST CENTER FREQUENCY OF THE SPECTRUM ANALYZER TO 860 Hz.

4.2.3.8 - TWO PEAKS SHOULD APPEAR WITH A LEVEL OF -6.5. DBV, IF NOT THEN ADJUST R2.

4.3 - A-3 PWB CALIBRATION

4.3.1 - NON-LINEAR DISTORTION SECOND ORDER AND THIRD ORDER

4.3.1.1 - DISCONNECT THE HP3582A SPECTRUM ANALYZER FROM THE CIRCUIT.

4.3.1.2 - (809A) - PRESS THE FOLLOWING KEYS:

- "LEV/FREQ"
- "LEV/FREQ"
- "ENTER
- "1004"
- "ENTER"
- "SET REF"
- "EXEC"

4.3.1.3 - REFER TO FIGURE 5.3,BUT DO NOT CONNECT THE HP3455A.

4.3.1.4 - SET THE HP3325A AMPLITUDE TO 1 VOLT.

4.3.1.5 - ADJUST THE FOLLOWING BANDPASS FILTERS USING PROCEDURES A, AND B.

POT	R16	R27	R146	R47	R60	R69
	519Hz,	495Hz,	545Hz,	2239Hz,	2180Hz,	2300Hz.

4.3.1.6 - ADJUST THE FOLLOWING BANDPASS FILTERS USING PROCEDURES A, AND B.

POT	R85	R98	R109
	1899.6Hz,	1860Hz,	1940Hz

4.3.2 - ENVELOPE DELAY FILTER AND LEVEL ADJUSTMENTS

4.3.2.1 - REFER TO FIGURE 5.3,BUT DO NOT CONNECT THE HP3455A.

4.3.2.2 - CONNECT THE WAVETEK (50 ohms OUT) TO "AMPTD MOD" INPUT IN THE REAR OF THE HP3325A.

4.3.2.3 - (HP3325A) - SET THE HP3325A TO 1004 Hz (CARRIER FREQ).

4.3.2.4 - (WAVETEK) - SET THE WAVETEK TO 82 Hz ,AND 84.66 Hz ONE AT A TIME.

4.3.2.5 -(WAVETEK) - ADJUST THE LEVEL SO THAT THE OUTPUT WAVEFORM LOOKS LIKE FIGURE 5.5.

4.3.2.6 - REFER TO PROCEDURE A AND B,(SECTION 5.1) TO ADJUST THE FOLLOWING BAND PASS FILTERS.

POT	R141	R6
	82Hz	84.66Hz

4.3.2.7 - (809A) - PRESS THE FOLLOWING KEYS ON THE 809A.

- "REPEAT"
- "REPEAT"
- "ENTER"
- "ENTER"
- "SET REF"
- "EXEC"

4.3.2.8 - (WAVETEK) - SET THE WAVETEK TO 83.33 Hz.

4.3.2.9 - CONNECT THE SCOPE PROBE AT TP6 ON THE A2 BOARD, (TP6 IS LOCATED AT THE LEFT FAR CORNER OF THE A2 BOARD).

4.3.2.10 - ADJUST R139 ON THE A3 BOARD UNTIL THE WAVEFORM LOOK LIKE FIGURE 5.5.

4.3.2.11 - DISCONNECT THE WAVETEK FROM THE CIRCUIT.

4.3.3 - P/AR RECEIVER

4.3.3.1 - (809A) - PRESS THE FOLLOWING KEYS:

- "LEV/FREQ"
- "LEV/FREQ"
- "ENTER
- "ENTER"
- "SET REF"
- "EXEC"

4.3.3.2 - REFER TO PROCEDURE A AND B,TO ADJUST THE FOLLOWING BANDPASS FILTERS.

POT	R160	R165
	1300HZ	1300HZ

4.3.3.3 - REFER TO FIGURE 5.3, BUT DO NOT CONNECT THE HP3455.

4.3.3.4 - DISCONNECT BOTH SCOPE PROBES.

4.3.4 - NON-LINEAR SECOND ORDER LEVEL ADJUSTMENT

4.3.4.1 - SET THE FREQUENCY OF THE HP3325A TO 520Hz. ADJUST R19 SO THAT THE VOLTAGE AT PIN 8 OF U44 IS 0.707 X THE VOLTAGE AT TP1.

4.3.4.2 - CHANGE THE FREQUENCY TO 2240Hz AND ADJUST R8 SO THE VOLTAGE AT PIN 8 OF U44 IS 0.707 X THE VOLTAGE AT TP1.

4.3.4.3 - SET THE FREQUENCY TO 1900Hz. ADJUST R30 SO THAT THE VOLTAGE AT PIN 14 OF U58 IS EQUAL TO THE VOLTAGE AT TP1.

4.3.5 - PHASE JITTER FILTER ADJUSTMENT

4.3.5.1 - FOLLOW PROCEDURES A, AND B (SECTION 5.1). ADJUST THE FOLLOWING BANDPASS FILTERS:

POT	R238	R240
	1179 Hz	894.4 Hz

4.3.5.2 - TO ADJUST THE 666.5 Hz FILTER, CONNECT TP23 WITH TP34 AND FOLLOW PROCEDURES A AND B. SCOPE SHOULD BE CONNECTED BETWEEN TP28 AND TP35.

POT	R239
	666.5 HZ

4.3.5.3 - DISCONNECT TP23 AND TP34.

4.3.5.4 - TO ADJUST THE 1360 Hz FILTER, CONNECT

TP34 AND TP25 AND FOLLOW PROCEDURES A AND B. SCOPE SHOULD BE CONNECTED BETWEEN TP35 AND TP22.

POT	R241
	1360 HZ

4.3.5.5 - DISCONNECT TP34 AND TP25.

4.3.5.6 - REFER TO THE BRADLEY SET UP IN FIGURE 5.8.

4.3.5.7 - (809A) - PRESS THE FOLLOWING KEYS:

- "PHASE JITT"
- "PHASE JITT"
- "ENTER"
- "ENTER"
- "SET REF"
- "EXEC"

4.3.5.8 - (BRADLEY) - TURN THE PHASE MODULATION DEGREE CONTROL KNOB TO 20 DEGREES. THE 809A SHOULD READ 20 DEGREES +/- 1 DEGREES.

4.3.5.9 - (BRADLEY) - REPEAT PROCEDURE 1.5.6 BUT SET THE PHASE MODULATION DEGREE KNOB TO 40 DEGREES AND 60 DEGREES. THE 809A SHOULD READ 40 DEGREES +/- 2 DEGREES, 60 DEGREES +/- 3 DEGREES, ONE AT A TIME.

4.3.5.10 - (809A) - PRESS THE FOLLOWING KEYS:

- "PHASE JITT"
- "PHASE JITT"
- "ENTER"
- "8"
- "ENTER"
- "SET REF"
- "EXEC"

4.3.5.11 - (BRADLEY) - CHANGE THE MODULATION FREQUENCY TO 20 Hz AND THEN REPEAT PROCEDURE 1.5.8 AND 1.5.9.

4.3.6 - P/AR CALIBRATION

4.3.6.1 - DISCONNECT THE BRADLEY AND LOOP THE XMTR BACK TO THE RCVR ON THE 809A.

4.3.6.2 - CONNECT A FLUKE ACROSS THE XMTR AND THE RCVR.

4.3.6.3 - PRESS THE FOLLWOING KEYS ON THE 809A:

- "P/AR"
- "P/AR"
- "ENTER"
- "SET REF"
- "EXEC"

4.3.6.4 - ADJUST R156 UNTIL THE FLUKE READS 0.00 dBm, +/- 0.01 dBm.]

4.3.6.5 - CONNECT THE 809A OUTPUT/INPUT THROUGH THE BRADLEY.

4.3.6.6 - VARY THE OUTPUT LEVEL OF THE BRADLEY. P/AR SHOULD REMAIN 100 +/- 2. IF NOT CHANGE U48 TO TL074.

5.0 - APPENDIX

5.1 - BANDPASS FILTER CALIBRATION

A. THE BANDPASS FILTER CALIBRATION USE A SIGNAL GENERATOR AND THE X-Y FUNCTION OF THE OSCILLOSCOPE.THE FILTER IS CALIBRATED BY ADJUSTING THE FILTER POTENTIOMTER TO ACHIEVE A STRAIGHT LINE LISSAJOUS PATTERN ON THE OSCILLOSCOPE SCREEN.REFER TO FIGURE 5.6,FOR A TYPICAL TEST SET-UP.

B. THE FILTER CALIBRATION WILL BE PERFORMED USING THE FOLLOWING SEQUENCE OF STEPS.

1- CONNECT THE SIGNAL GENERATOR TO THE INPUT OF THE OF THE FILTER STAGE.

2- SET THE SIGNAL GENERATOR FREQUENCY AND LEVEL SPECIFIED TO CALIBRATE THE FILTER STAGE.

3- CONNECT THE X-Y SCOPE PROBES TO THE INPUT AND OUTPUT TEST POINTS OF THE FILTER STAGE

4- SET THE SCOPE CONTROLS TO THE X-Y FUNCTIONS AND ADJUST THE AMPLITUDE GAIN CONTROLS OF THE SCOPE UNTIL THE LISSAJOUS PATTERN ON THE SCOPE SCREEN.

5.2 - BRADLEY SET-UP, NO. 1

- ALL SWITCHES OFF
- SWITCH DOWN THE "HIT INTERVAL" SWITCH IN RIGHT ENTRY OF SET.
- POWER ON.
- "REPETITIVE HITS" GREEN LIGHT WILL COME ON.
- SIGNAL SOURCE SWITCH TO INPUT 310 JACK.
- "HIT INTERVAL" SWITCH TO 0.2 SECONDS.
- OUTPUT LEVEL TO 0.0dBM.
- "HIT DURATION" TO 100 X 0.1.
- "HIT RISE TIME" TO 2 X 0.1.
- GAIN HIT OR DROPOUT AMP TO 9dB.
- IMPULSE LEVEL TO 70dBM.
- PHASE HIT AMPL. TO 0 DEGREE.
- CONNECT 809B XMTR TO BRADLEY INPUT AND BRADLEY OUTPUT TO 809B RCVR.

FIGURE 5.7.

5.3 - BRADLEY SET-UP, NO. 2

- ALL SWITCHES OFF
- SWITCH DOWN THE "HIT INTERVAL" SWITCH IN RIGHT ENTRY OF SET.
- POWER ON.
- "REPETITIVE HITS" GREEN LIGHT WILL COME ON.
- TURN ON THE PHASE MODULATION DEGREES SWITCH.
- SET THE MODULATION FREQUENCY CONTROL KNOB TO 100 HZ AND ITS MULTIPLIER SWITCH TO X1.
- CONNECT 809B XMTR TO BRADLEY INPUT AND BRADLEY OUTPUT TO 809B RCVR.

FIGURE 5.8.

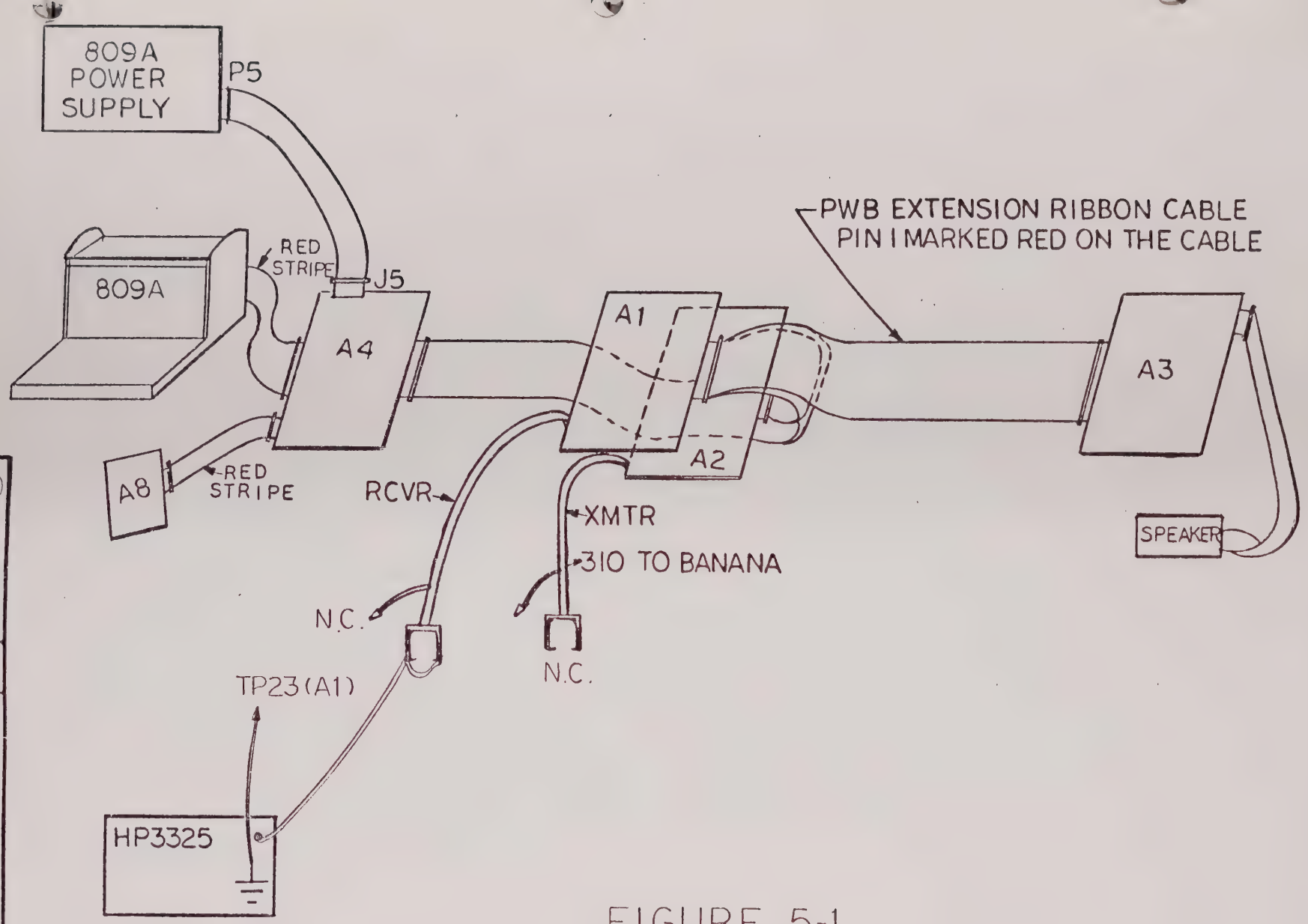

FIGURE 5-1

Sierra	SIZE A	DRAWING NO. A03456400	
CODE IDENT NO. 54778	SCALE ——		SHEET 25 OF 30

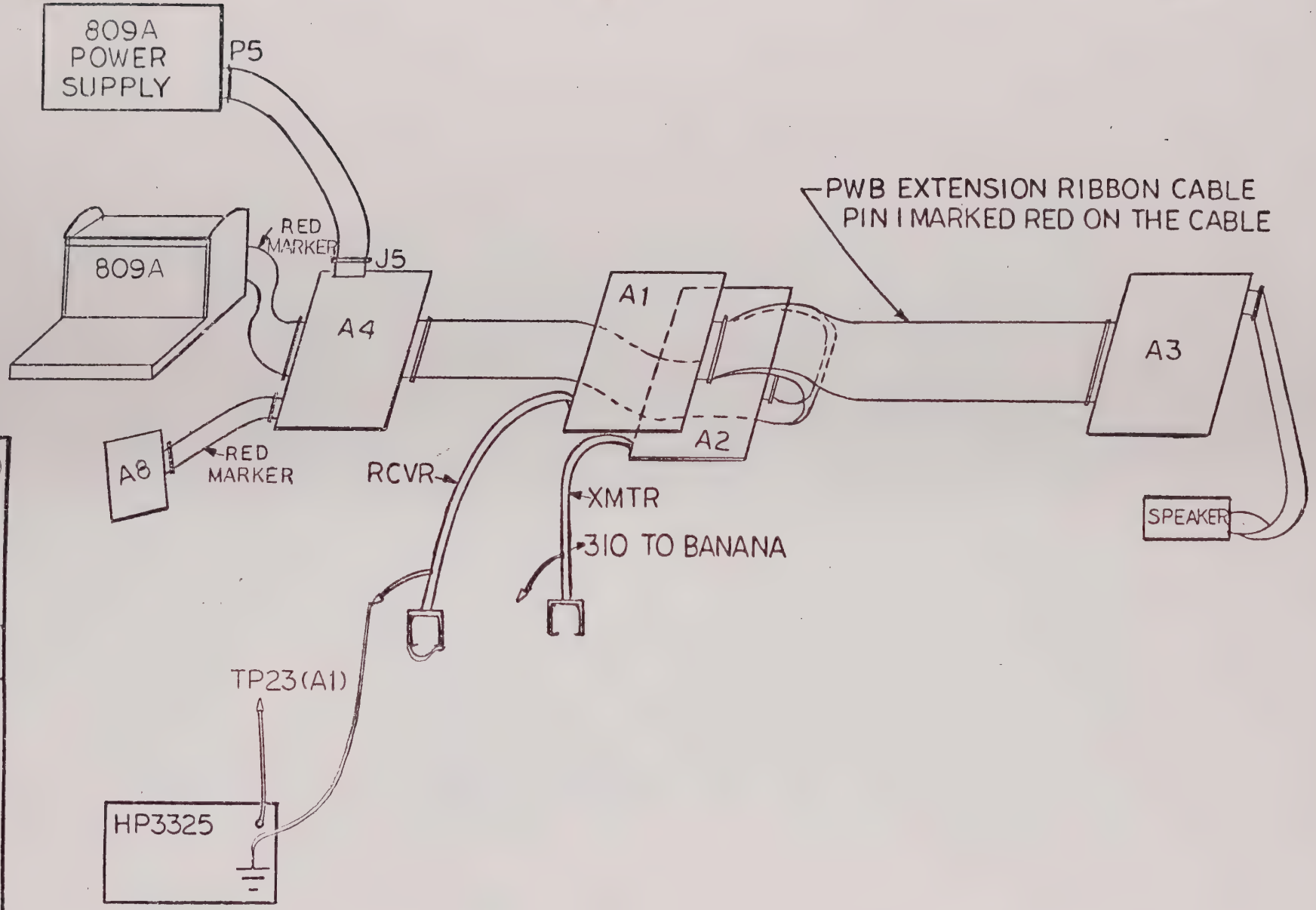
809A
POWER
SUPPLY
P5
809A
RED
MARKER
J5
A4
A1
A2
A3
PWB EXTENSION RIBBON CABLE
PIN 1 MARKED RED ON THE CABLE
A8
RED
MARKER
RCVR
XMTR
310 TO BANANA
SPEAKER
TP23(A1)
HP3325

FIGURE 5-2

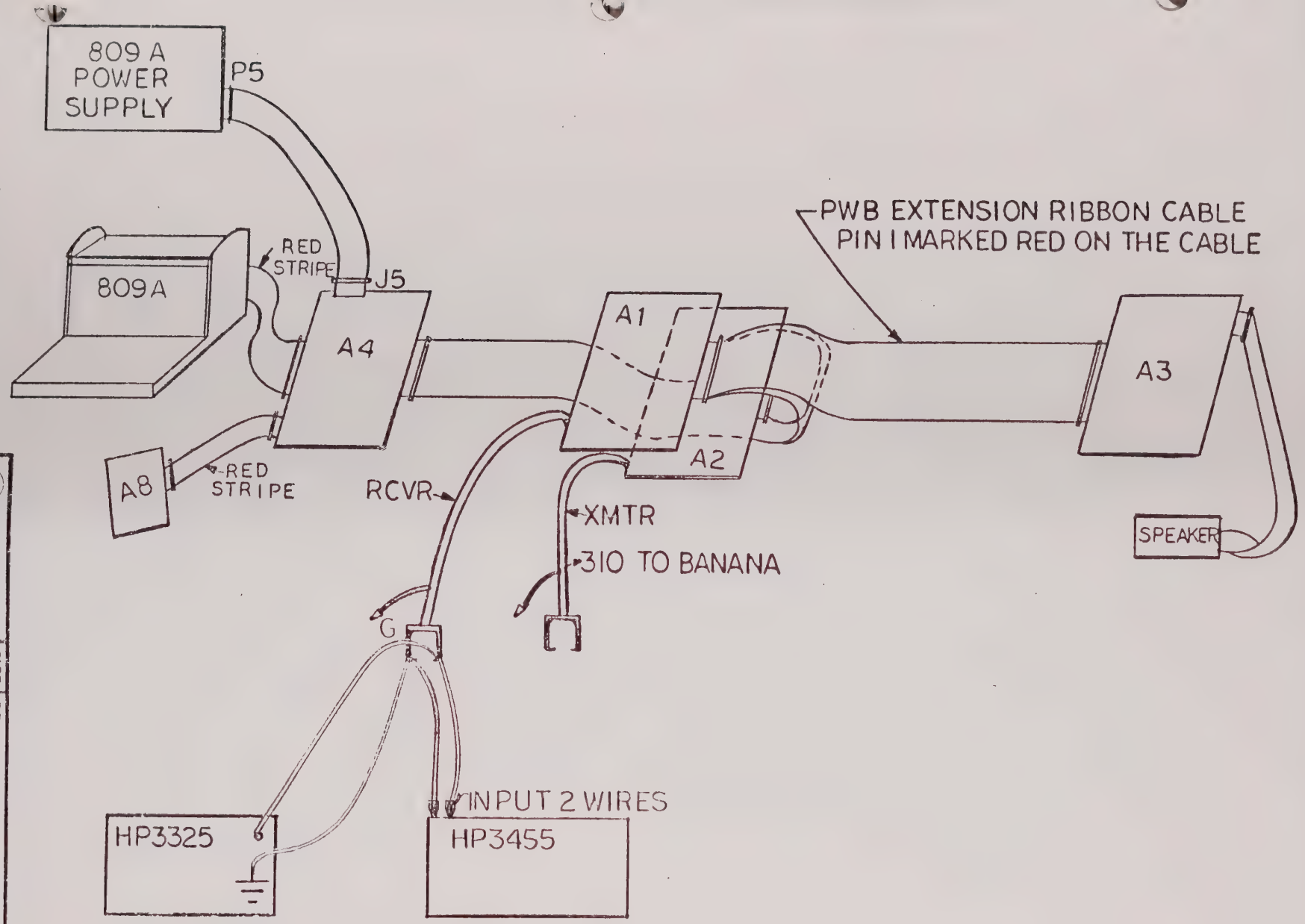

FIGURE 5-3

Sierra
CODE IDENT NO. 54778
SIZE A
DRAWING NO. A03456400
SCALE —
SHEET 27 OF 30

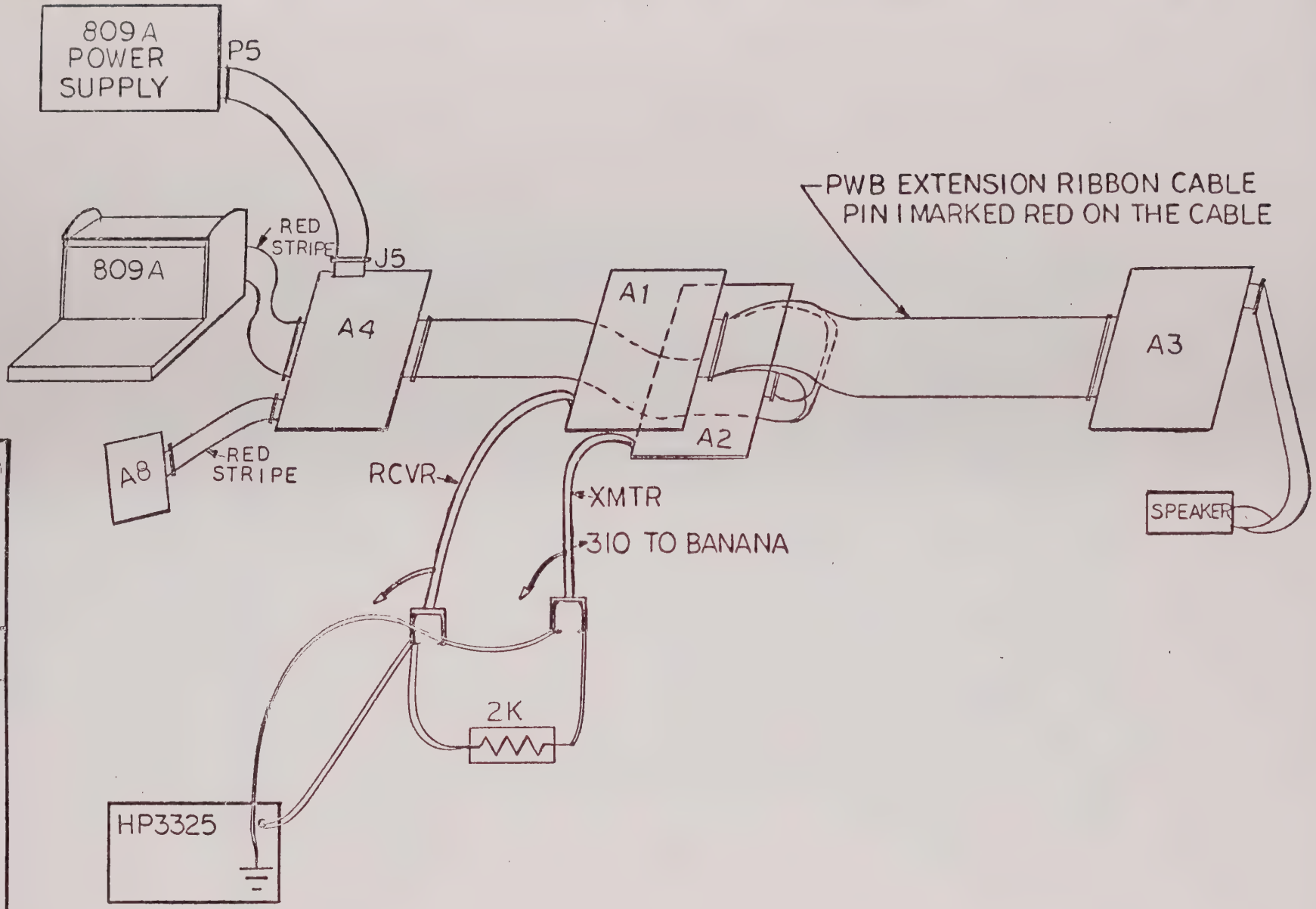

FIGURE 5-4

Sierra
CODE IDENT NO. 54778
SIZE A
DRAWING NO. A0345640O
SCALE —
SHEET 28 OF 30

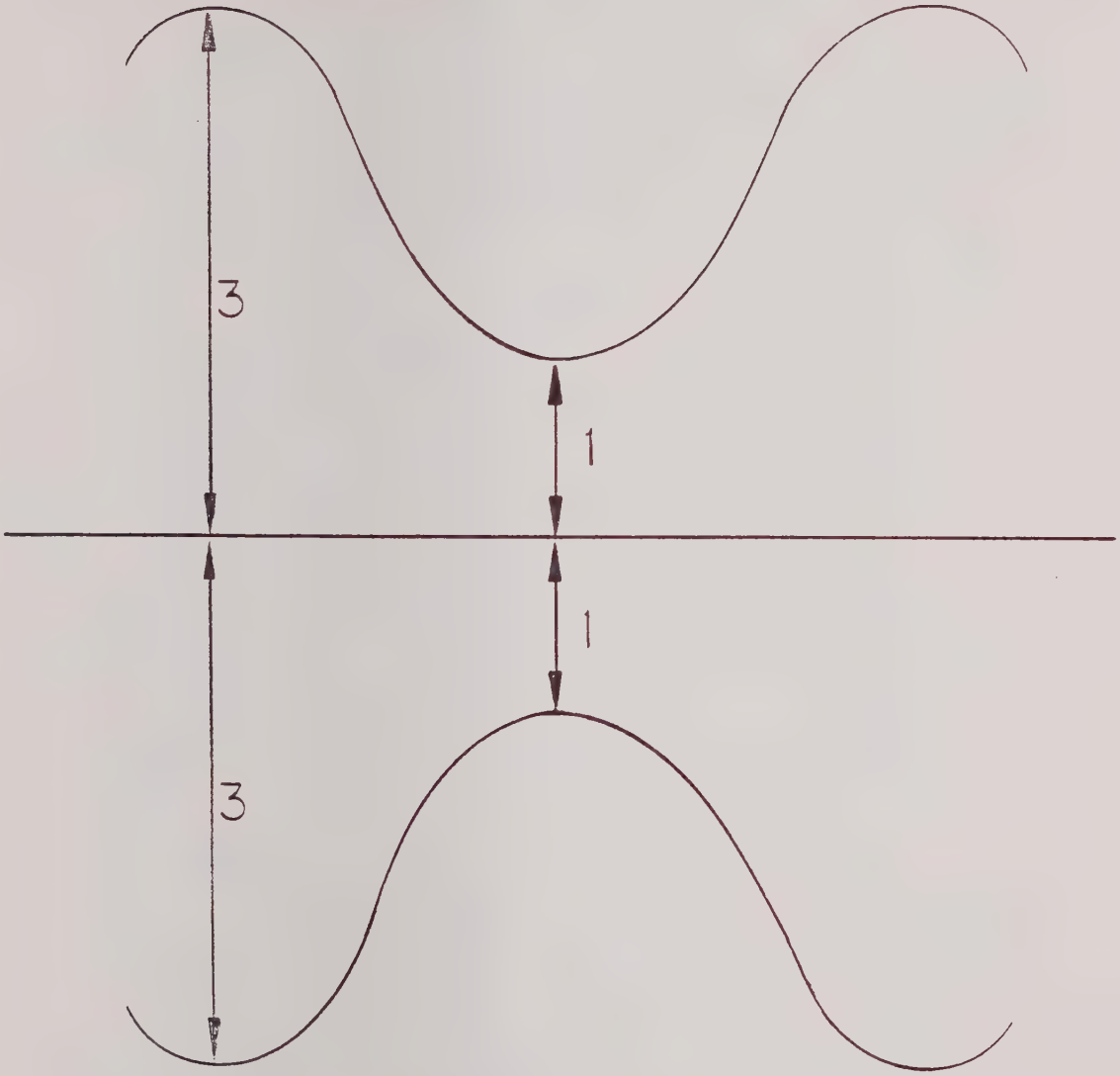

THE RATIO SHOULD BE 3 TO 1=50% MODULATION

FIGURE 5-5

Sierra	SIZE A	DRAWING NO. A03456400
CODE IDENT NO. 54778	SCALE ———	SHEET 29 OF 30

671-14-2

FIGURE 5-6

Sierra	SIZE A	DRAWING NO. A03456400
CODE IDENT NO. 54778	SCALE	SHEET 30 OF 30

671-14-2

THIS DRAWING AND SPECIFICATIONS SHOWN SHALL NOT BE COPIED OR USED WITHOUT WRITTEN CONSENT OF LEAR SIEGLER, INC., SIERRA ELECTRONIC DIVISION.

REVISIONS

ZONE	LTR	DESCRIPTION	DATE	APPROVED
	A	PILOT RUN RELEASE PER DCO 302		
	A1	DCO # 352	12-24-0	
	B	PRODUCTION REL PER DCO 474		

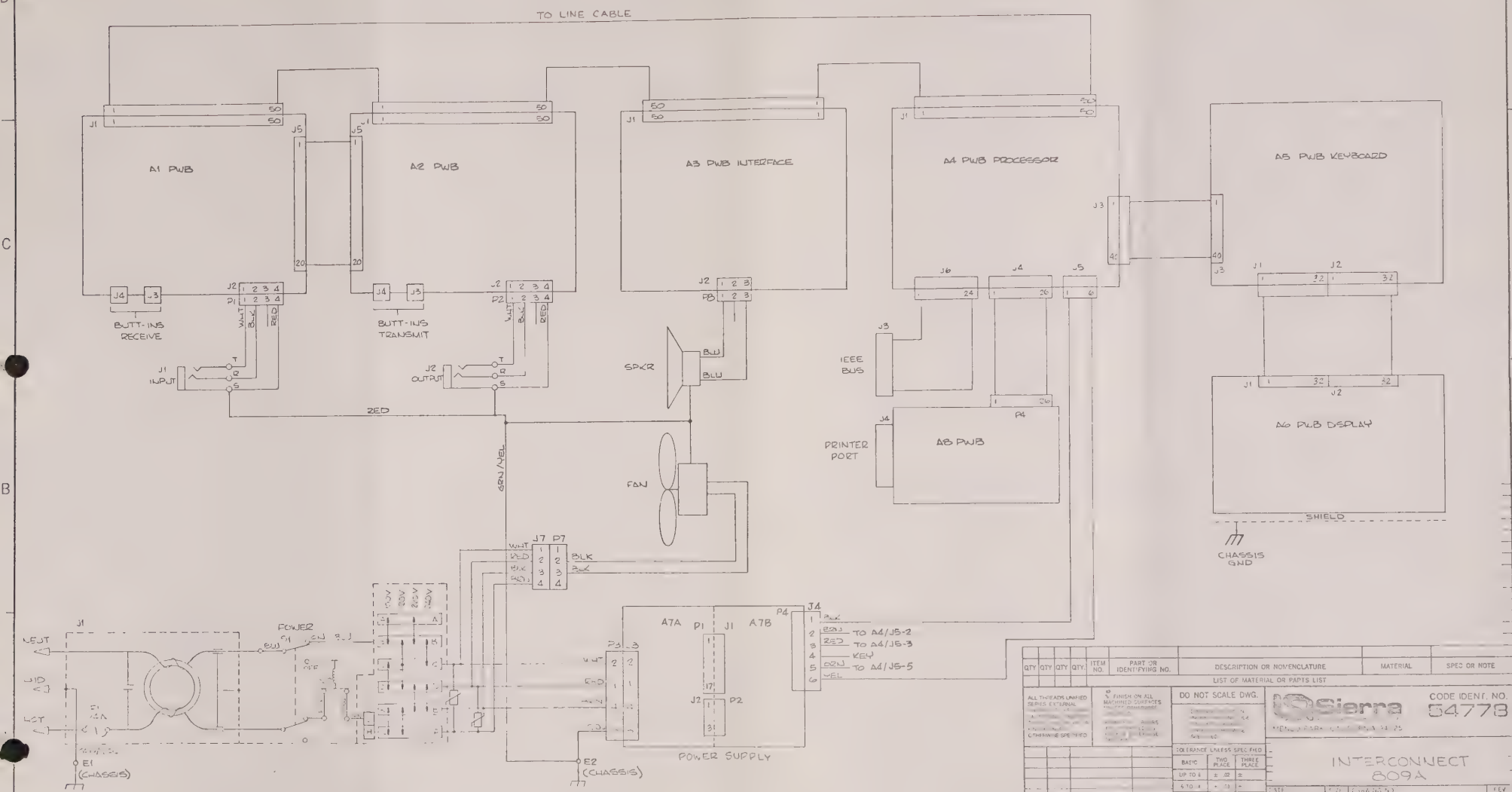

QTY	QTY	QTY	QTY	ITEM NO.	PART OR IDENTIFYING NO.	DESCRIPTION OR NOMENCLATURE	MATERIAL	SPEC OR NOTE

LIST OF MATERIAL OR PARTS LIST

ALL THREADS UNIFIED SERIES EXTERNAL

FINISH ON ALL MACHINED SURFACES

DO NOT SCALE DWG.

Sierra

CODE IDENT. NO. 54778

INTERCONNECT 809A

TOLERANCE UNLESS SPECIFIED		
BASIC	TWO PLACE	THREE PLACE
UP TO 6	± .02	±
6 TO 14	± .03	±

ASSY OR ITEM	QTY NEXT	NEXT ASSY.	MODEL NO

APPLICATION

SIZE D

DRAWING NO

REV B

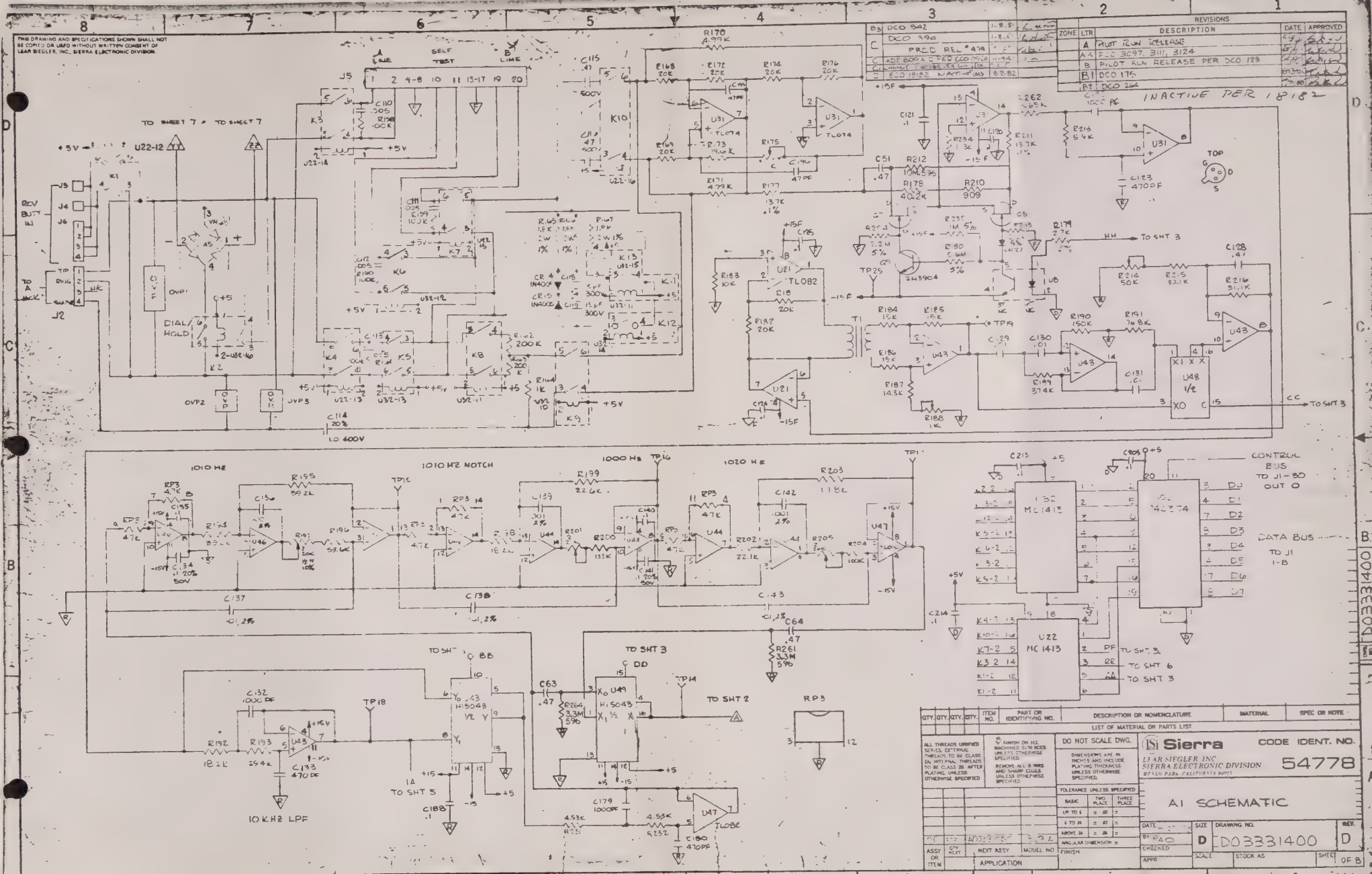
THIS DRAWING AND SPECIFICATIONS SHOWN SHALL NOT BE COPIED OR USED WITHOUT WRITTEN CONSENT OF LEAR SIEGLER, INC., SIERRA ELECTRONIC DIVISION
REVISIONS
ZONE LTR DESCRIPTION DATE APPROVED
A PILOT RUN RELEASE
A1 ECO 3097, 3111, 3124
B PILOT RUN RELEASE PER DCO 123
B1 DCO 176
B2 DCO 266
INACTIVE PER 18182
TO SHEET 7
TO SHEET 3
TO SHT 3
TO SHT 2
TO SHT 5
TO SHT 6
1010 HZ
1010 HZ NOTCH
1020 HZ
10 KHZ LPF
CONTROL BUS TO J1-80 OUT 0
DATA BUS TO J1 1-8
DO NOT SCALE DWG.
Sierra
LEAR SIEGLER INC
SIERRA ELECTRONIC DIVISION
CODE IDENT. NO. 54778
A1 SCHEMATIC
SIZE D
DRAWING NO. D03331400
REV. D
SHEET OF 8

THIS DRAWING AND SPECIFICATIONS SHOWN SHALL NOT BE COPIED OR USED WITHOUT WRITTEN CONSENT OF LEAR SIEGLER, INC., SIERRA ELECTRONIC DIVISION.

REVISIONS			
ZONE	LTR	DESCRIPTION	DATE	APPROVED
		SEE SHEET ONE		

PROGRAM WEIGHTING

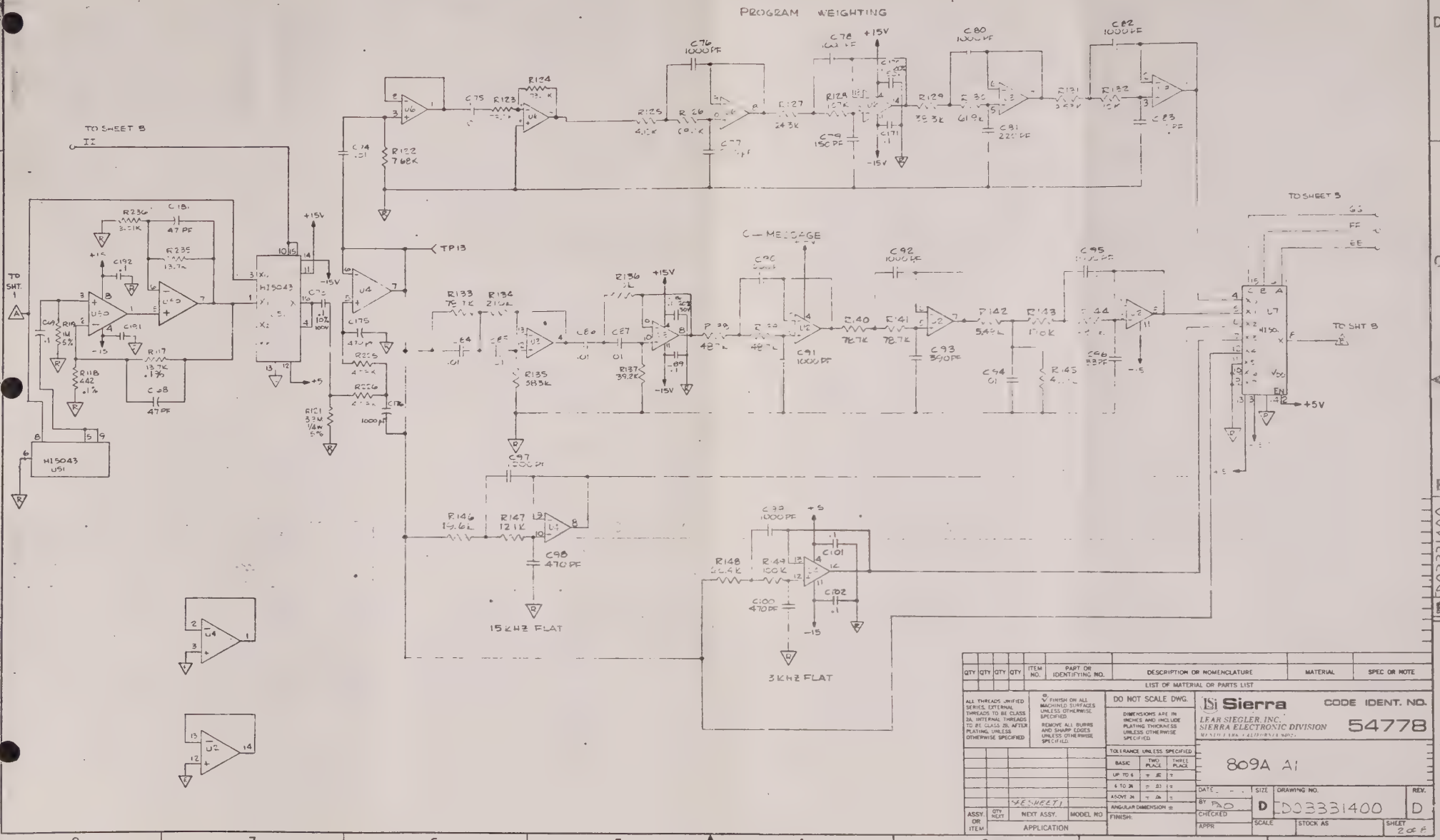

QTY	QTY	QTY	QTY	ITEM NO.	PART OR IDENTIFYING NO.	DESCRIPTION OR NOMENCLATURE	MATERIAL	SPEC OR NOTE
						LIST OF MATERIAL OR PARTS LIST		

ALL THREADS UNIFIED SERIES, EXTERNAL THREADS TO BE CLASS 2A, INTERNAL THREADS TO BE CLASS 2B AFTER PLATING, UNLESS OTHERWISE SPECIFIED

√ FINISH ON ALL MACHINED SURFACES UNLESS OTHERWISE SPECIFIED. REMOVE ALL BURRS AND SHARP EDGES UNLESS OTHERWISE SPECIFIED

DO NOT SCALE DWG. DIMENSIONS ARE IN INCHES AND INCLUDE PLATING THICKNESS UNLESS OTHERWISE SPECIFIED

TOLERANCE UNLESS SPECIFIED		
BASIC	TWO PLACE	THREE PLACE
UP TO 6	± .02	±
6 TO 24	± .03	±
ABOVE 24	± .06	±
ANGULAR DIMENSION ±		

FINISH:

Sierra
LEAR SIEGLER, INC.
SIERRA ELECTRONIC DIVISION
MONTEREY, CALIFORNIA 93940

CODE IDENT. NO. 54778

809A A1

DATE	SIZE	DRAWING NO.	REV.
BY PAO	D	D03331400	D
CHECKED			
APPR	SCALE	STOCK AS	SHEET 2 OF #

SEE SHEET 1

ASSY. OR ITEM	QTY NEXT	NEXT ASSY.	MODEL NO
		APPLICATION	

D03331400

THIS DRAWING AND SPECIFICATIONS SHOWN SHALL NOT BE COPIED OR USED WITHOUT WRITTEN CONSENT OF LEAR SIEGLER INC., SIERRA ELECTRONIC DIVISION

REVISIONS			
ZONE	LTR	DESCRIPTION	DATE	APPROVED
		SE		

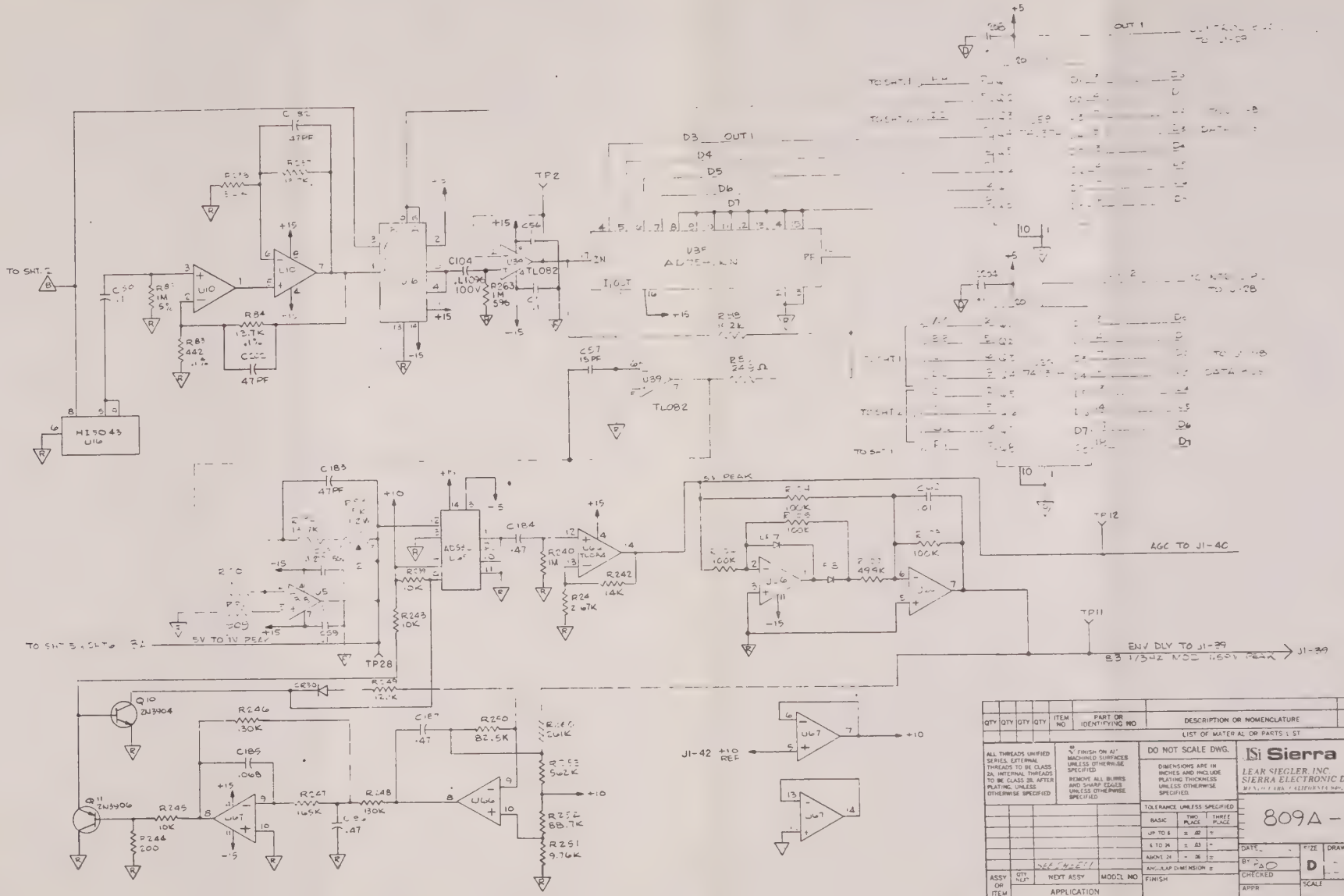

QTY	QTY	QTY	QTY	ITEM NO	PART OR IDENTIFYING NO	DESCRIPTION OR NOMENCLATURE	MATERIAL	SPEC OR NOTE
						LIST OF MATERIAL OR PARTS LIST		

ALL THREADS UNIFIED SERIES, EXTERNAL THREADS TO BE CLASS 2A, INTERNAL THREADS TO BE CLASS 2B, AFTER PLATING, UNLESS OTHERWISE SPECIFIED

√ FINISH ON ALL MACHINED SURFACES UNLESS OTHERWISE SPECIFIED

REMOVE ALL BURRS AND SHARP EDGES UNLESS OTHERWISE SPECIFIED

DO NOT SCALE DWG.

DIMENSIONS ARE IN INCHES AND INCLUDE PLATING THICKNESS UNLESS OTHERWISE SPECIFIED.

TOLERANCE UNLESS SPECIFIED		
BASIC	TWO PLACE	THREE PLACE
UP TO 6	± .02	±
6 TO 24	± .03	±
ABOVE 24	± .06	±
ANGULAR DIMENSION ±		

Sierra
LEAR SIEGLER, INC.
SIERRA ELECTRONIC DIVISION
MONTEREY, CALIFORNIA

CODE IDENT. NO. 54778

809A - A1

ASSY OR ITEM	QTY NEXT	NEXT ASSY	MODEL NO
		APPLICATION	FINISH

DATE
BY RAO
CHECKED
APPR

SIZE D | DRAWING NO. LD0333400 | REV. D

SCALE | STOCK AS | SHEET 3 OF 8

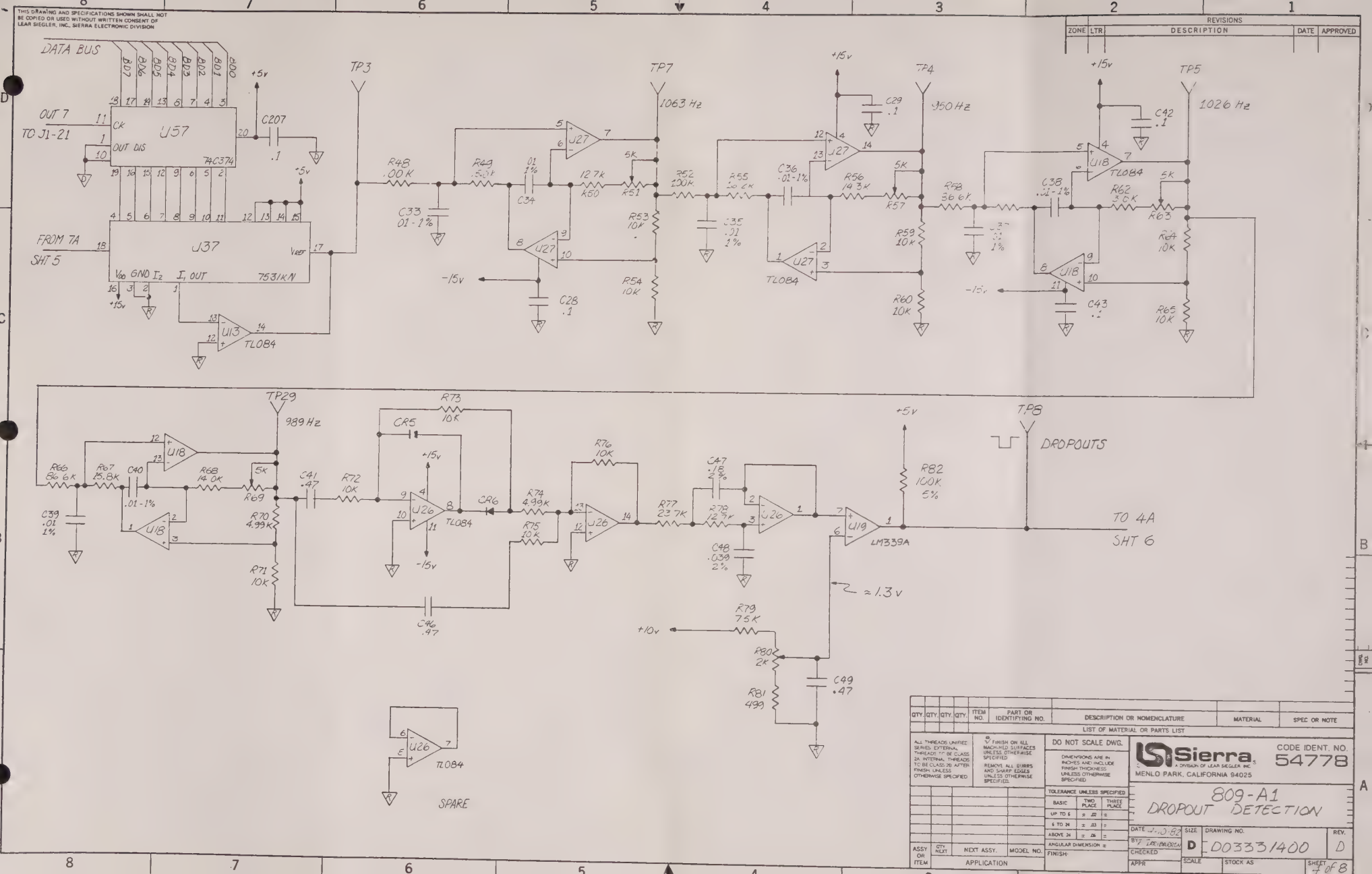
THIS DRAWING AND SPECIFICATIONS SHOWN SHALL NOT BE COPIED OR USED WITHOUT WRITTEN CONSENT OF LEAR SIEGLER, INC., SIERRA ELECTRONIC DIVISION
REVISIONS
ZONE LTR DESCRIPTION DATE APPROVED
DATA BUS
BD7 BD6 BD5 BD4 BD3 BD2 BD1 BD0
OUT 7
TO J1-21
U57
74C374
FROM 7A
SHT 5
J37
7531KN
TP3
TP7
1063 Hz
TP4
950 Hz
TP5
1026 Hz
TP29
989 Hz
TP8
DROPOUTS
TO 4A
SHT 6
LM339A
TL084
SPARE
≈ 1.3 v
+10v
+15v
-15v
+5v
DO NOT SCALE DWG.
Sierra
A DIVISION OF LEAR SIEGLER INC.
MENLO PARK, CALIFORNIA 94025
CODE IDENT. NO. 54778
809-A1
DROPOUT DETECTION
DRAWING NO. D03331400
REV. D
SHEET 7 OF 8

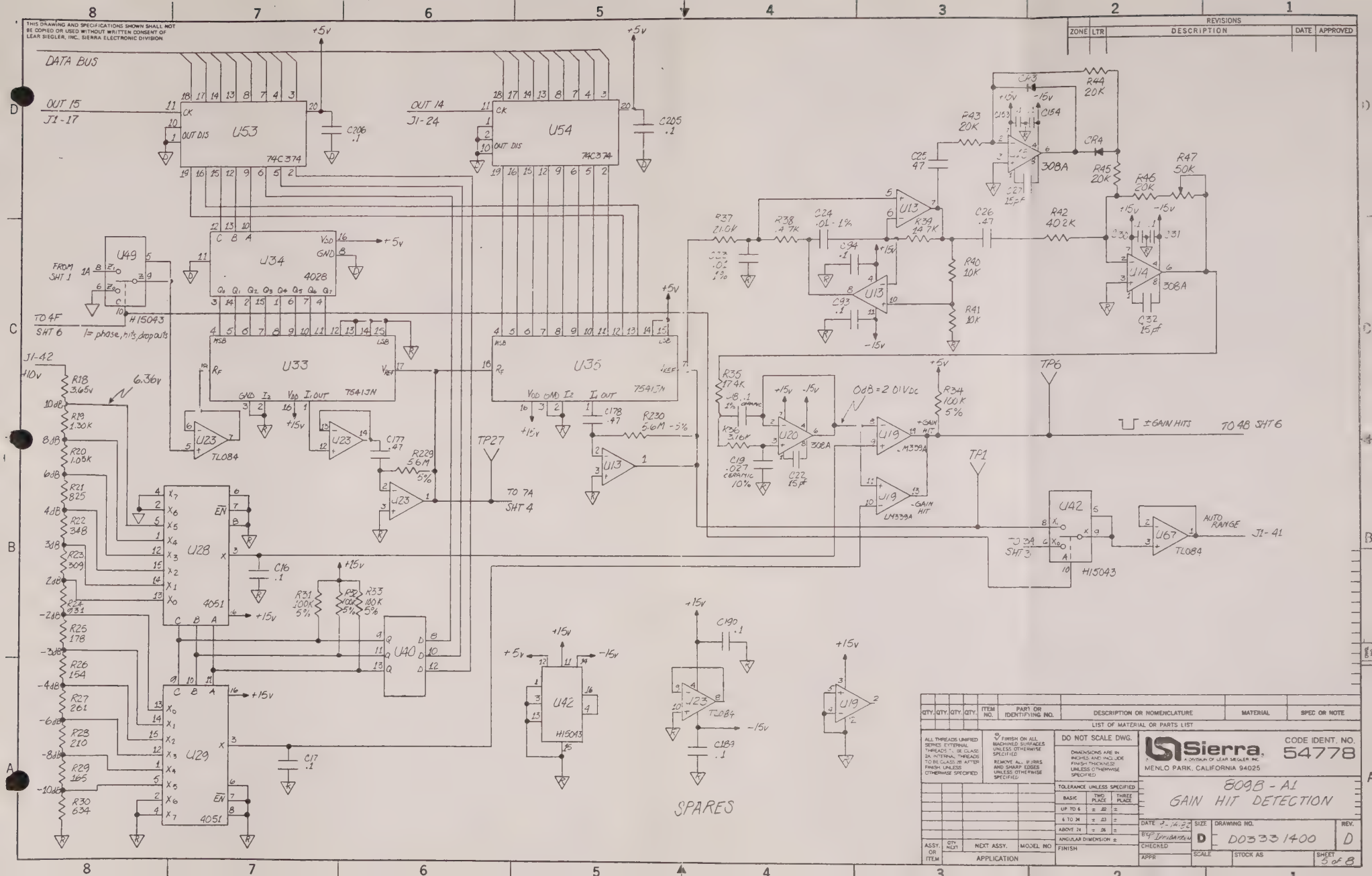
THIS DRAWING AND SPECIFICATIONS SHOWN SHALL NOT BE COPIED OR USED WITHOUT WRITTEN CONSENT OF LEAR SIEGLER, INC., SIERRA ELECTRONIC DIVISION
REVISIONS
ZONE LTR DESCRIPTION DATE APPROVED
DATA BUS
OUT 15 J1-17
OUT 14 J1-24
U53 74C374
U54 74C374
U34 4028
U33 7541JN
U35 7541JN
U49 H15043
FROM SHT 1
TO 4F SHT 6
1= phase, hits, drop outs
J1-42
U28 4051
U29 4051
U40
U42 H15043
U13
U14 308A
U20 308A
U19 LM339A
U67 TL084
U23 TL084
TP27
TP6
TP1
TO 7A SHT 4
TO 4B SHT 6
TO 3A SHT 3
0dB = 2.01VDC
±GAIN HITS
AUTO RANGE
J1-41
SPARES
LIST OF MATERIAL OR PARTS LIST
QTY. QTY. QTY. QTY. ITEM NO. PART OR IDENTIFYING NO. DESCRIPTION OR NOMENCLATURE MATERIAL SPEC OR NOTE
ALL THREADS UNIFIED SERIES EXTERNAL THREADS TO BE CLASS 2A INTERNAL THREADS TO BE CLASS 2B AFTER FINISH UNLESS OTHERWISE SPECIFIED
FINISH ON ALL MACHINED SURFACES UNLESS OTHERWISE SPECIFIED
REMOVE ALL BURRS AND SHARP EDGES UNLESS OTHERWISE SPECIFIED
DO NOT SCALE DWG.
DIMENSIONS ARE IN INCHES AND INCLUDE FINISH THICKNESS UNLESS OTHERWISE SPECIFIED
TOLERANCE UNLESS SPECIFIED
BASIC TWO PLACE THREE PLACE
UP TO 6 ± .02 ±
6 TO 24 ± .03 ±
ABOVE 24 ± .06 ±
ANGULAR DIMENSION ±
FINISH
ASSY. OR ITEM QTY NEXT NEXT ASSY. MODEL NO
APPLICATION
Sierra. A DIVISION OF LEAR SIEGLER INC.
MENLO PARK, CALIFORNIA 94025
CODE IDENT. NO. 54778
809B - A1
GAIN HIT DETECTION
DATE 9-14-82
BY P. Irribarren
CHECKED
APPR
SIZE D
DRAWING NO. D0333 1400
REV. D
SCALE
STOCK AS
SHEET 5 of 8

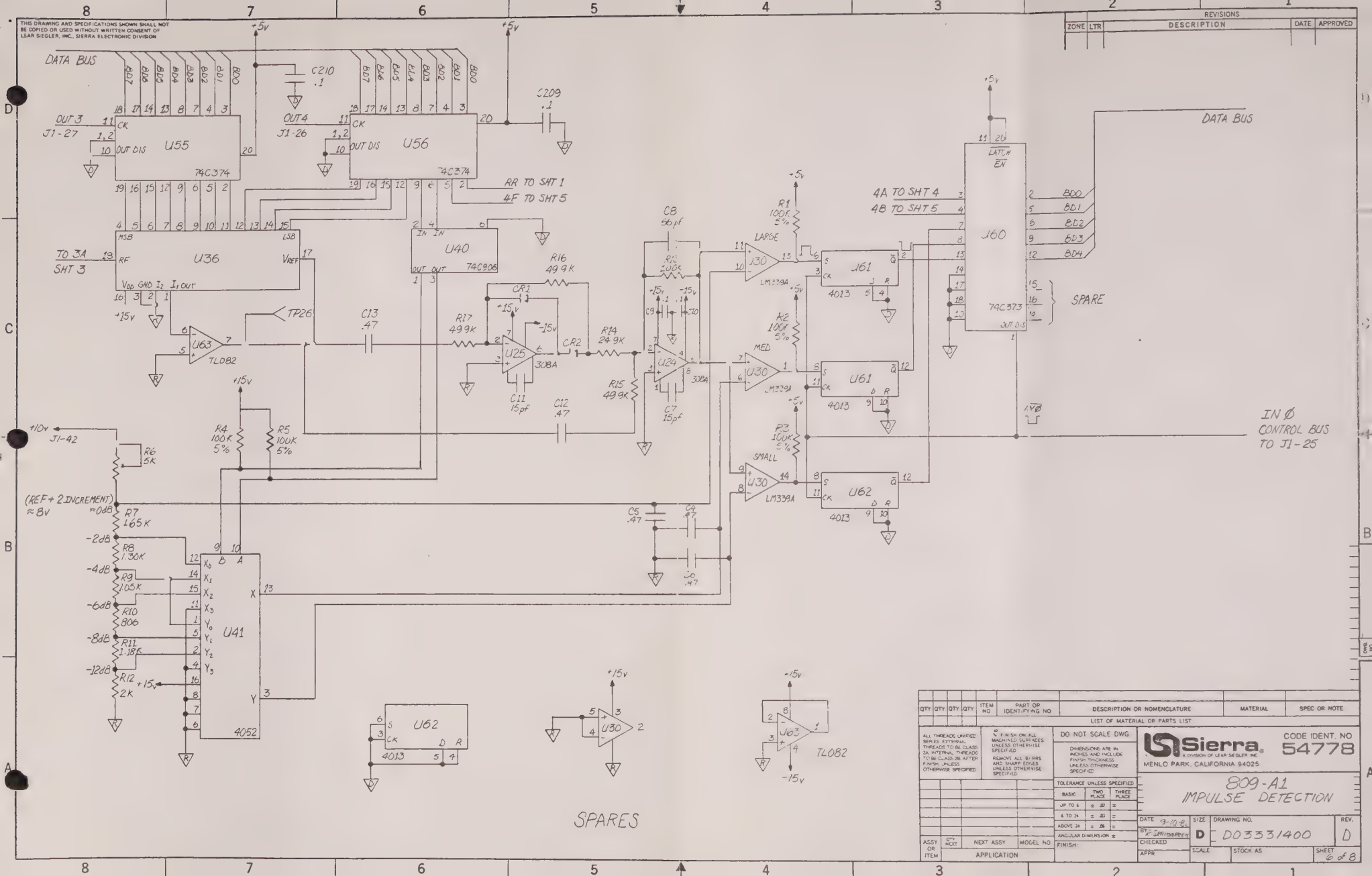
THIS DRAWING AND SPECIFICATIONS SHOWN SHALL NOT BE COPIED OR USED WITHOUT WRITTEN CONSENT OF LEAR SIEGLER, INC., SIERRA ELECTRONIC DIVISION
REVISIONS
ZONE LTR DESCRIPTION DATE APPROVED
DATA BUS
OUT 3 J1-27
OUT 4 J1-26
U55 74C374
U56 74C374
C210 .1
C209 .1
RR TO SHT 1
4F TO SHT 5
TO 3A SHT 3
U36
U40 74C906
U63 TL082
TP26
C13 .47
R16 49.9K
R17 49.9K
CR1
CR2
U25 308A
C11 15pf
R14 24.9K
R15 49.9K
C12 .47
C8 56pf
R13 100K
U24 308A
C7 15pf
LARGE U30 LM339A
MED U30 LM339A
SMALL U30 LM339A
R1 100K 5%
R2 100K 5%
R3 100K 5%
U61 4013
U62 4013
4A TO SHT 4
4B TO SHT 5
U60 74C373
LATCH EN
SPARE
IN Ø CONTROL BUS TO J1-25
+10v J1-42
R6 5K
R4 100K 5%
R5 100K 5%
(REF + 2 INCREMENT) ≈8v
R7 1.65K
R8 1.30K
R9 1.05K
R10 806
R11 1.18K
R12 2K
U41 4052
C5 .47
C4 .47
C6 .47
U62 4013
U30
U63 TL082
SPARES
QTY QTY QTY QTY ITEM NO PART OR IDENTIFYING NO DESCRIPTION OR NOMENCLATURE MATERIAL SPEC OR NOTE
LIST OF MATERIAL OR PARTS LIST
ALL THREADS UNIFIED SERIES EXTERNAL THREADS TO BE CLASS 2A INTERNAL THREADS TO BE CLASS 2B AFTER FINISH UNLESS OTHERWISE SPECIFIED
FINISH ON ALL MACHINED SURFACES UNLESS OTHERWISE SPECIFIED
REMOVE ALL BURRS AND SHARP EDGES UNLESS OTHERWISE SPECIFIED
DO NOT SCALE DWG
DIMENSIONS ARE IN INCHES AND INCLUDE FINISH THICKNESS UNLESS OTHERWISE SPECIFIED
TOLERANCE UNLESS SPECIFIED
BASIC TWO PLACE THREE PLACE
UP TO 6 ± .02 ±
6 TO 24 ± .03 ±
ABOVE 24 ± .06 ±
ANGULAR DIMENSION ±
FINISH
Sierra A DIVISION OF LEAR SIEGLER INC
MENLO PARK, CALIFORNIA 94025
CODE IDENT. NO 54778
809-A1 IMPULSE DETECTION
DATE 9-10-82
BY K. SPRINGBERG
CHECKED
APPR
SIZE D
DRAWING NO. D03331400
REV. D
SCALE
STOCK AS
SHEET 6 of 8
ASSY OR ITEM QTY NEXT NEXT ASSY MODEL NO
APPLICATION

THIS DRAWING AND SPECIFICATIONS SHOWN SHALL NOT BE COPIED OR USED WITHOUT WRITTEN CONSENT OF LEAR SIEGLER, INC., SIERRA ELECTRONIC DIVISION.

REVISIONS				
ZONE	LTR	DESCRIPTION	DATE	APPROVED
		SEE SHEET ONE		

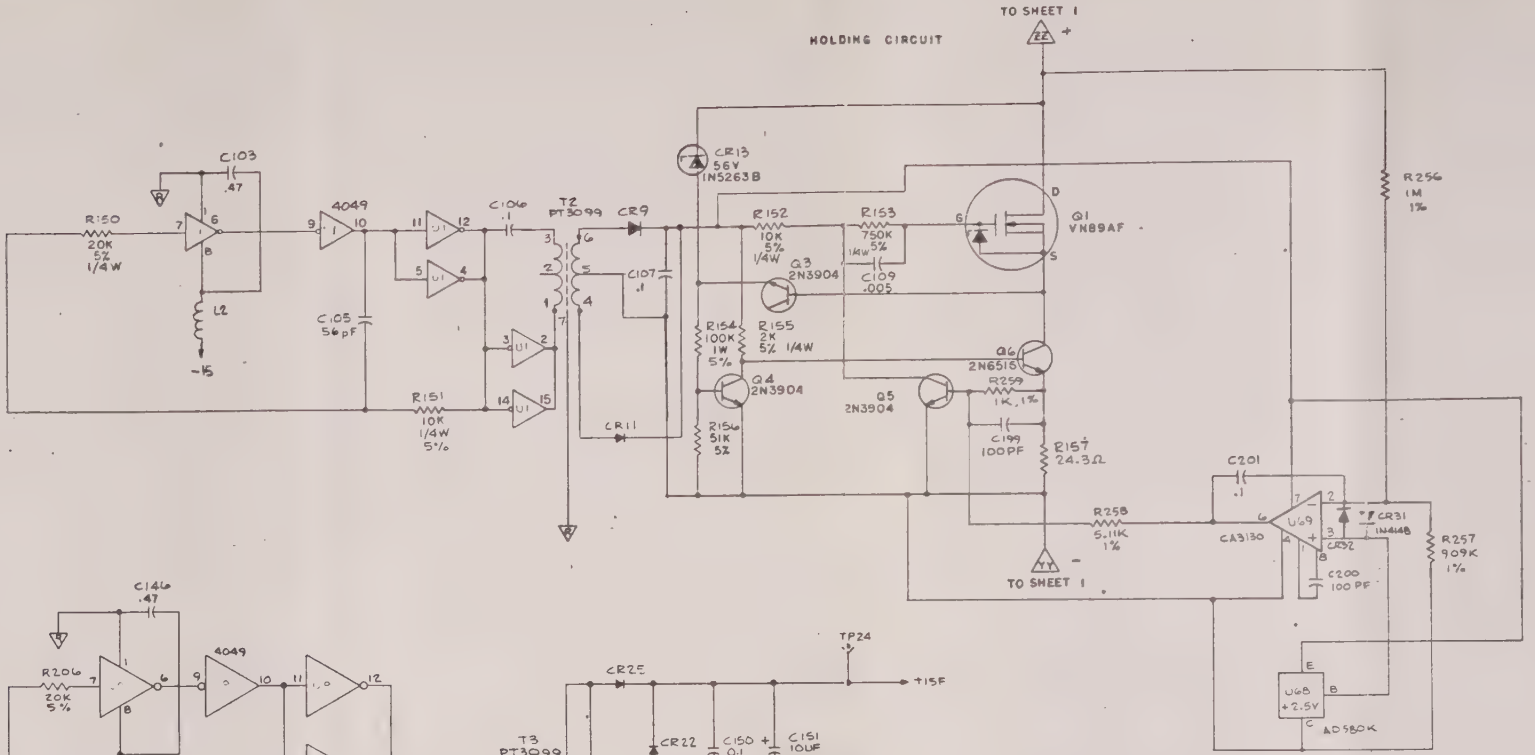

QTY	QTY	QTY	QTY	ITEM NO	PART OR IDENTIFYING NO	DESCRIPTION OR NOMENCLATURE	MATERIAL	SPEC OR NOTE
						LIST OF MATERIAL OR PARTS LIST		

ALL THREADS UNIFIED SERIES, EXTERNAL THREADS TO BE CLASS 3A, INTERNAL THREADS TO BE CLASS 2B AFTER FINISH, UNLESS OTHERWISE SPECIFIED

63 FINISH ON ALL MACHINED SURFACES UNLESS OTHERWISE SPECIFIED. REMOVE ALL BURRS AND SHARP EDGES UNLESS OTHERWISE SPECIFIED

DO NOT SCALE DWG.

DIMENSIONS ARE IN INCHES AND INCLUDE FINISH THICKNESS UNLESS OTHERWISE SPECIFIED

TOLERANCE UNLESS SPECIFIED		
BASIC	TWO PLACE	THREE PLACE
UP TO 6	± .02	±
6 TO 24	± .03	±
ABOVE 24	± .06	±
ANGULAR DIMENSION	±	

FINISH-

SEE SHEET 1

ASSY OR ITEM	QTY NEXT	NEXT ASSY	MODEL NO.
		APPLICATION	

Sierra — A DIVISION OF LEAR SIEGLER INC
MENLO PARK CALIFORNIA 94025

CODE IDENT. NO. 54778

809 A1

DATE	SIZE	DRAWING NO.	REV.
11/30/78	D	ED03331400	D
BY D. BRUCE			
CHECKED			
APPR	SCALE ~	STOCK AS	SHEET 7 OF 8

ED03331400

THIS DRAWING AND SPECIFICATIONS SHOWN SHALL NOT BE COPIED OR USED WITHOUT WRITTEN CONSENT OF LEAR SIEGLER, INC., SIERRA ELECTRONIC DIVISION.

REVISIONS				
ZONE	LTR	DESCRIPTION	DATE	APPROVED
		SEE SHEET ONE		

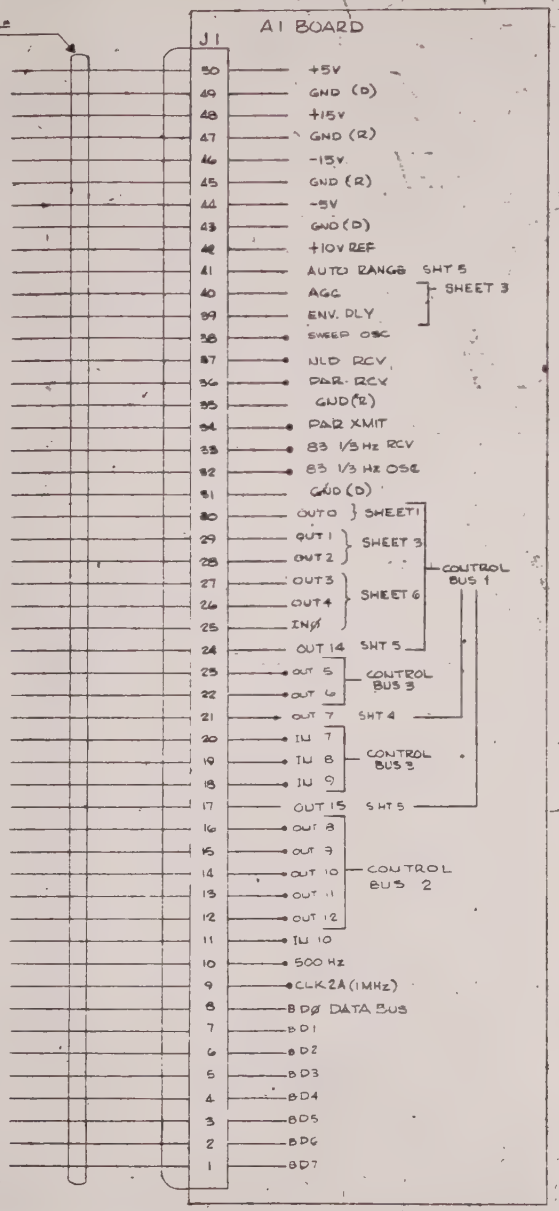

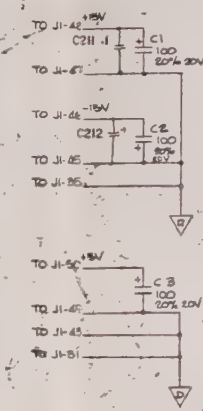

NOTES — UNLESS OTHERWISE SPECIFIED

1. ALL RESISTANCE VALUES ARE IN OHMS
2. ALL RESISTORS ARE 1/8 W, ± 1%
3. ALL CAPACITANCE VALUES ARE IN MICROFARADS
4. ▽ REF. DENOTE GROUND RETURN
5. ALL DIODES ARE 1N4148
6. ▽ DENOTES DIGITAL GROUND
7. ALL 5% RESISTORS ARE 1/4 W
8. ON CONNECT J1 —● DENOTES FUNCTION NOT USED ON THIS BOARD.

IC POWER PIN-OUT

REF DESIG	IC TYPE	+15V	GND (R)	-15V	+5V	-5V	GND (D)
U2,3,4,6,13,18,20,21, 23,43,44,46,66,67	TL084	4	—	11	—	—	—
U19,U30	LM339A	3	12	—	—	—	—
U5	LM318	7	—	4	—	—	—
U52,58,59,61,63,64,65,66	74C374	—	—	—	20	—	10
U22,32	MC1413	—	—	—	?	—	8
U7	μ508	3	14	3			—
U48,49,51,16,62	H19043	11	13	14	12		—
							—
U47,50,10,39,63	TL082	8	—	4	—	—	—
U38	AD754JN	16	3	—	—	—	—
U60	74C373	—	—	—	20	—	10
U31	TL084						
U21	TL082		—				—
	—	—	—	—	—	—	—
				—	—	—	—
U15,14,20,24,25	LM3086	7	—	4	—	—	—
	—		—		—	—	—
U65	VFC62	—	—	—	—	—	—
U40	74C906	—	—	—	14	—	7
U28,29	CD4051	16	7,8	—	—	—	—
U65	AD532	14	10	3	—	—	—

IC POWER PIN-OUT

REF DESIG	IC TYPE	+15V	GND (R)	-15V	+5	-5V	GND (D)
			—	—	—	—	—
U1,9	CD4049	-	1	*	—	—	1
U61,62	CD4013	-	-	-	14	—	7
U36,37	AD7531	16	3	-	—	—	—
			-	-			
U33,U35	7541JN	16	3	-	—	—	—
			—	—	—	—	—
			-	-	—	—	—
				-	—	—	—
U69	CA3130						
U68	AD580						

4: +15V
11: -15V
8: +15V
4: -15V

* = THRU INDUCTOR

Δ +5V THRU DIODE + RESISTOR

REFERENCE DESIGNATION DATA

LAST USED	NOT USED

QTY	QTY	QTY	QTY	ITEM NO.	PART O IDENTIFYING NO.	DESCRIPTION OR NOMENCLATURE	MATERIAL	SPEC OR NOTE
						LIST OF MATERIAL OR PARTS LIST		

ALL THREADS UNIFIED SERIES, EXTERNAL THREADS TO BE CLASS 2A, INTERNAL THREADS TO BE CLASS 2B, AFTER PLATING, UNLESS OTHERWISE SPECIFIED

▽ FINISH ON ALL MACHINED SURFACES UNLESS OTHERWISE SPECIFIED. REMOVE ALL BURRS AND SHARP EDGES UNLESS OTHERWISE SPECIFIED.

DO NOT SCALE DWG.

DIMENSIONS ARE IN INCHES AND INCLUDE PLATING THICKNESS UNLESS OTHERWISE SPECIFIED.

TOLERANCE UNLESS SPECIFIED

BASIC	TWO PLACE	THREE PLACE
UP TO 6	± .02	±
6 TO 24	± .03	±
ABOVE 24	± .05	±
ANGULAR DIMENSION	±	
FINISH		

Sierra

LEAR SIEGLER, INC. SIERRA ELECTRONIC DIVISION
MENLO PARK, CALIFORNIA 94025

CODE IDENT. NO. 54778

809A A1

ASSY. OR ITEM	QTY NEXT	NEXT ASSY	MODEL NO.
		SEE SHEET 1	
		APPLICATION	

DATE 8-25-78
BY PAO
CHECKED
APPR.

SIZE	DRAWING NO.	REV.
D	D03331400	D
SCALE	STOCK AS	SHEET 1 OF 5

D03331400

REVISIONS

SYM	DESCRIPTION	DATE	APPROVED
A	PILOT RUN RELEASE		
A1	PCO 3067, 3068	5/9/80	
A8	PCO 3100, 3110, 3114, 3123, 3137	6/3/80	
B	PILOT RUN RELEASE PER DCO 123	6/3/80	
B2	DCO 145, 175	7/11/80	
B3	DCO 264	10/29/80	
B4	DCO 342	1-8-81	
B5	DCO 373	1-8-81	
B6	DCO 400	1-8-81	
C	DCO 394	1-14-81	
C1	DCO 418	1-27-81	
D	PRODUCTION RELEASE PER DCO 474	2-25-81	
D	ADD 809A-R USAGE PER TYPE1 17924	11-9-81	
D1	ECO 18041 (CHANGE TO 809BR)	2/9/82	
E	DCO 18182 LMS	8-2-82	

E03335100	1	809A
NEXT ASSY.	QTY	MODEL NO

Sierra

LEAR SIEGLER, INC.
SIERRA ELECTRONIC DIVISION
MENLO PARK, CALIFORNIA 94025

CODE IDENT. NO. 54778

A1 PWB ASSY L/M

DATE	SIZE	DRAWING NO.	REV
3-10-80	A	A03331000	E
BY R. SAKODA			
APPV'D	STOCK AS	SHEET 1 OF 9	

571-14-1

QTY	QTY	QTY	QTY	ITEM	PART NO.	DESCRIPTION	REF.
			2	31	907301472	RESISTOR 14.7K, 1/8W, 1%	R38, R39
			2	30	907302102	21.0K, 1/8W, 1%	R37, R134
			1	29	907303161	3.16K	R36
			1	28	907301742	17.4K	R35
			1	27	907306340	634Ω, 1/8W, 1%	R30
			1	26	907301650	165Ω, 1/8W, 1%	R29
			1	25	907302100	210Ω, 1/8W, 1%	R28
			1	24	907302610	261Ω, 1/8W, 1%	R27
			1	23	907301540	154Ω, 1/8W, 1%	R26
			1	22	907301780	178Ω, 1/8W, 1%	R25
			1	21	907309310	931Ω, 1/8W, 1%	R24
			1	20	907303090	309Ω, 1/8W, 1%	R23
			1	19	907303480	348Ω, 1/8W, 1%	R22
			1	18	907308250	825Ω, 1/8W, 1%	R21
			2	17	907303651	3.65K, 1/8W, 1%	R18, R262
			5	16	907304992	49.9K, 1/8W, 1%	R15, R16,
				16			R17, R107, R145
			1	15	907302492	24.9K, 1/8W, 1%	R14
			13	14	907301003	100K, 1/8W, 1%	R13, R48,
				14			R52, R104-106, R108, R149, R158-161, R204
			1	13	907302001	2.00K, 1/8W, 1%	R12
			1	12	907301181	1.18K, 1/8W, 1%	R11
			1	11	907308060	806Ω, 1/8W, 1%	R10
			2	10	907301051	1.05K, 1/8W, 1%	R9, R20
			2	9	907301301	1.30K, 1/8W, 1%	R8, R19
			1	8	907301651	1.65K, 1/8W, 1%	R7
			6	7	907900316	5K POT, 10%	R6, R51, R57
				7			R63, R69, R93
			10	6	906900104	RESISTOR, 100K, 1/4W, 5%	R1-R5,
				6			R31-R34, R82
			1	5	906900106	10M, 1/4W, 5%	R212
			2	4	906900335	3.3M, 1/4W, 5%	R264, 261
			REF	3	D03331400	A1 PWB SCHEMATIC	
			1	2	904500707	A1 PWB D03331200	
			REF	1	D03331100	A1 PWB ASSY	

LIST OF MATERIAL

A1 PWB ASSY L/M

Sierra

CODE IDENT NO. 54778

SIZE A

DRAWING NO. A03331000

SCALE

SHEET 2 OF 9

BISHOP GRAPHICS/ACCUPRESS REORDER NO. A-045

			1	59	907304121	RESISTOR, 4.12K, 1/8W, 1%		R125
			2	58	907307322	73.2K, 1/8W, 1%		R123, R124
			1	57	907307681	7.68K, 1/8W, 1%		R122
			3	55	907301372	13.7K, 1/8W, 1%		R92, R235
				55				R237
			2	54	907309090	909Ω, 1/8W, 1%		R91, R210
			3	53	907301001	1K, 1/8W, 1%		R90, R164,
				53				R259
			1	52	9073024R9	249Ω, 1/8W, 1%		R89
			1	51	907301023	102K, 1/8W, 1%		R88
			6	50	906900105	1M, 1/4W, 5%		R85, R119,
				50			R121, R263	R240, R255
			4	49	907711372	13.7K, 0.1%		R84, R117
				49				R177, R211
			2	48	907704420	442Ω, 0.1%		R83, R118
			1	47	907304990	499Ω, 1/8W, 1%		R81
			1	46	907900288	2K POT, 1/2W, 10%		R80
			1	45	907307501	7.50K, 1/8W, 1%		R79
			1	44	907302372	23.7K, 1/8W, 1%		R77
			2	43	907301402	14.0K, 1/8W, 1%		R68, R242
			1	42	907301582	15.8K, 1/8W, 1%		R67
			1	41	907301302	13.0K, 1/8W, 1%		R62
			1	40	907301542	15.4K, 1/8W, 1%		R61
			2	39	907308662	86.6K, 1/8W, 1%		R58, R66
			2	38	907301432	14.3K, 1/8W, 1%		R56, R187
			1	37	907301622	16.2K, 1/8W, 1%		R55
			2	36	907301272	12.7K, 1/8W, 1%		R50, R78
			4	35	907301502	15.0K, 1/8W, 1%		R49, R184
				35				R185, R186
			1	34	907900281	10K POT, 10%		R47
			3	33	907304991	4.99K, 1/8W, 1%		R74, R170,
				33				R171
			20	32	907301002	RESISTOR, 10K, 1/8W, 1%		R40, R41
				32		R53, R54, R59, R60, R64, R65,		
				32		R70-R73, R75, R76, R132, R136,		
				32		R183, R239, R243, R245		
Y	QTY	QTY	QTY	ITEM	PART NO.	DESCRIPTION		REF.

LIST OF MATERIAL

A1 PWB ASSY L/M

Sierra

CODE IDENT NO. 54778

SIZE A

DRAWING NO. A0331000

SCALE

SHEET 3 OF 9

BISHOP GRAPHICS/ACCUPRESS

QTY	QTY	QTY	QTY	ITEM	PART NO.	DESCRIPTION	REF.
			1	91	907307682	RESISTOR, 76.8K, 1/8W, 1%	R191
			1	90	907301503	150K, 1/8W, 1%	R190
			1	89	907303742	37.4K, 1/8W, 1%	R189
			3	88	906900565	5.6M, 1/4W, 5%	R160, R229
				88			R230
			1	87	906900272	2.7Ω, 1/4W, 5%	R179
			2	86	907304022	40.2K 1/8W, 1%	R178, R42
			2	85	907900290	1K POT	R175, R188
			12	84	907302002	20K, 1/8W, 1%	R168, R172
				84		R43-R47, R169, R174, R176 R181, R182	
			3	83	907600182	1.8K 2W, 1%	R165, R166
				83			R167
			2	82	907302003	200K, 1/8W, 1%	R163, R162
			1	81	907324R30	24.3Ω, 1/8W, 1%	R157
			1	80	906900513	51K, 1/4W, 5%	R156
			1	79	906900202	2K, 1/4W, 5%	R155
			1	78	905400104	100K, 1W 5%	R154
			1	77	906900754	750K, 1/8W, 1%	R153
			3	76	906900103	10K, 1/4W, 5%	R151, R152
				76			R207
			2	75	906900203	20K, 1/4W, 5%	R150, R206
			1	74	907306042	60.4K, 1/8W, 1%	R148
			1	73	907301212	12.1K, 1/8W, 1%	R147
			2	72	907301962	19.6K, 1/8W, 1%	R146, R173
			1	71	907302873	287K, 1/8W, 1%	R144
			1	70	907301783	178K, 1/8W, 1%	R143
			1	69	907305491	5.49K, 1/8W, 1%	R142
			2	68	907303922	39.2K, 1/8W, 1%	R137, R195
				68			
			1	67	907303833	383K, 1/8W, 1%	R135
			3	66	907307872	78.7K, 1/8W, 1%	R133 R140 R141
			1	65	907309531	9.53K, 1/8W, 1%	R131
			1	64	907306192	61.9K, 1/8W, 1%	R130
			1	63	907303832	38.3K, 1/8W, 1%	R129
			1	62	907301073	107K, 1/8W, 1%	R128
			1	61	907302432	24.3K, 1/8W, 1%	R127
			1	60	907306812	RESISTOR, 68.1K, 1/8W, 1%	R126

LIST OF MATERIAL

AI PWB ASSY L/M

Si Sierra

CODE IDENT NO. 54778

SIZE A

DRAWING NO. A0331000

SCALE

SHEET 4 OF 9

BISHOP GRAPHICS/ACCUPRESS

QTY	QTY	QTY	QTY	ITEM	PART NO.	DESCRIPTION	REF.
				127	[redacted]	[redacted]	
				126			
				125			
				124			
				123			
			1	122	907302613	RESISTOR, 261K 1/8W 1%	R260
			2	121	907304872	RESISTOR, 48.7K 1/8W 1%	R138,139
			1	120	907305111	RESISTOR, 5.11K, 1/8W, 1%	R258
			1	119	907309093	909K, 1/8W, 1%	R257
			1	118	907301004	1.0M 1/8W, 1%	R256
			1	117	907305623	562K, 1/8W, 1%	R253
			1	116	907308872	88.7K, 1/8W, 1%	R252
			1	115	907309761	9.76K, 1/8W, 1%	R251
			1	114	907308252	82.5K, 1/8W, 1%	R250
			1	113	907301212	12.1K, 1/8W, 1%	R249
			1	112	907301653	165K, 1/8W, 1%	R247
			2	111	907301303	130K, 1/8W, 1%	R246,R248
			1	110	907302000	200Ω, 1/8W, 1%	R244
			1	109	907302671	2.67K, 1/8W, 1%	R241
			2	108	907303011	3.01K, 1/8W, 1%	R236,R238
			1	107	907301132	11.3K, 1/8W, 1%	R234
			2	106	906900225	2.2M, 1/4W, 5%	R233,R254
			4	105	907304531	4.53K, 1/8W, 1%	R225,R226
				105			R231,R232
			1	104	907305112	51.1K, 1/8W, 1%	R216
			1	103	907303012	30.1K, 1/8W, 1%	R215
			1	102	907900338	50K POT	R214
			1	101	907305901	5.9K, 1/8W, 1%	R213
			1	100	907301782	17.8K, 1/8W, 1%	R203
			1	99	907302212	22.1K, 1/8W, 1%	R202
			1	98	907301333	133K, 1/8W, 1%	R200
			1	97	907302262	22.6K, 1/8W, 1%	R199
			3	96	907900331	20K POT, 1/2W, 10%	R197,R201,R205
			1	95	907305362	53.6K, 1/8W, 1%	R196
			1	94	907303922	39.2K, 1/8W, 1%	R194
			1	93	907302942	29.4K, 1/8W, 1%	R193
			2	92	907311822	RESISTOR, 18.2K, 1/8W, 1%	R192,R198

LIST OF MATERIAL

A1 PWB ASSY L/M

Sierra

CODE IDENT NO. 54778

SIZE A

DRAWING NO. A03331000

SCALE

SHEET 5 OF 9

BISHOP GRAPHICS/ACCUPRESS
REORDER NO. A-048

QTY	QTY	QTY	QTY	ITEM	PART NO.	DESCRIPTION	REF.
			15	145	901440102	CAPACITOR, 1000pF, 5%, NPO	C76, C78,
				145		C80, C82, C83, C90, C91, C92, C95,	
				145		C97, C99, C122, C132,	
				145		C179, C176	
			7	144	901900470	47pF, DIP MICA	C68, C181
				144		C182, C183, C195, C196, C202	
			11	143	901411103	.01µF, 100V, 5%, CERAMIC	C62, C74
				143		C75, C84, C85, C86, C87, C94,	
				143		C129, C130, C131,	
			1	142	903100393	.039µF, 2%	C48
			1	141	901110184	.18µF, 2%	C47
			10	140	903110103	.01µF, 1%, POLY	C23, C24
				140		C33, C34, C35, C36, C37, C38,	
				140		C39, C40	
			1	139	901300273	.027µF, 10%	C19
			4	138	901330104	.1µF, 100V, 10% C73, 104	C18, C201
			56	137	901300104	.1µF, 50V, 20%	C9, C10,
				137		C16, C17 C28, C29, C30, C31	
				137		C42, C43. , C50, C55, C56,	
				137		C58, C59, C69, C88, C89, C101, C102,	
				137		C124, C106, C107, , C120, C121, C134, C135	
				137		C125, C140, C141, C148, C149, C150, C153,	
				137		C154, C170, C171, C188, C189, C190, C191,	
				137		C192, C193, C194, C203-C214	
			3	136	901320560	56 pF	C8, C105,
				136			C147
			6	135	901900150	15pF	C7, C11, C22,
				135			C27, C32, C57
			19	134	901320474	.47µF, 100V, 20% CERAM.	C4-C6, C12,
				134		C13, C25, C26, C41, C46, C49, , C103	
				134		C128 C146, C177, C178, C184, C51, C63, C64	
			3	133	902740107	CAPACITOR, 100µF, 20V, 20%	C1, C2, C3
			3	132	903100103	CAP .01uf 2%	C143, 137, 138
			3	131	903110102	CAP .001 uf 2%	C136, 139, 142
				130			
				129			
			1	128	920600472	4.7K RESISTOR PACK	RP3

LIST OF MATERIAL

A1 PWB ASSY L/M	Sierra	SIZE A	DRAWING NO. A03331000
	CODE IDENT NO. 54778	SCALE	SHEET 6 OF 9

BISHOP GRAPHICS/ACCUPRESS
REORDER NO A-0482

TY	QTY	QTY	QTY	ITEM	PART NO.	DESCRIPTION	REF.
			6	173	920210082	I.C., TL082	U10, U21,
				173			U39, U47, U50, U63
			1	172	920300428	4N28	U8
			1	171	920200508	HI508A	U7
			1	170	920310318	LM318	U5
			14	169	920210084	TL084	U2, U3,
				169		U4, U6, U13, U18, U23, U24	U27,
				169		U43, U44, U46, U66, U67	
			2	168	920204049	I.C., 4049	U1, U9,
				167			
				166			
				165			
				164			
				164			
			2	163	910804005	DIODE, IN4005	CR14, CR15
			1	162	9106352 63	DIODE, IN5263B	CR13
			18	161	910504148	DIODE, IN4148	CR1, CR2,
				161		CR3, CR4, CR5, CR6, CR7, CR8,	
				161		CR9, CR11, CR22, CR23	
				161		CR32 CR24, CR25, CR27, CR30, CR31	
				160			
				159			
			2	158	901330474	CAP .47 uf 5% CER 100V	C186, 187
			2	157	901900101	CAPACITOR, 100pF, 5%, DIP MICA	C199, C200
			1	156	901320683	.068 µF, 100V, 20%	C185
			2	155	902710106	10µF, 20V, 20%	C151, C152
			2	154	902200156	15 µF, 300V, ELECTROLYTIC	C118, C119
			2	153	901310474	.47µF, 500V	C115, C116
			1	152	903130105	1.0µF, 400V, 2%	C114
			5	151	901410502	.005µF, 100V, CERAMIC	C109, C110
				151		C111, C112, C113	
			6	150	901340471	470pF, 100V, 5%, NPO	C98, C100,
				150		C123, C133, C175, C180	
			1	149	901410330	33pF, 100V, 2%, NPO	C96
			1	148	901340391	390pF, 100V, 5%, NPO	C93
			1	147	901340151	150pF, 100V, 5%, NPO	C79
			2	146	901340221	CAPACITOR, 220pF, 100V, 5%, NPO	C77, C81

LIST OF MATERIAL

A1 PWB ASSY L/M	Sierra	SIZE A	DRAWING NO. A03331000
	CODE IDENT NO. 54778	SCALE	SHEET 7 OF 9

QTY	QTY	QTY	QTY	ITEM	PART NO.	DESCRIPTION	REF.
				206	[redacted]	[redacted]	
				205			
			3	204	913100006	OVER VOLTAGE PROTECTOR	OVP1,
				204			OVP2, OVP3
				203			
				202			
			2	201	909000189	INDUCTOR, 22μH, 5%, 2W	L1, L2
				200			
				199			
			2	198	C03328800	CUFF LINK OFFICE	J3, J4
			2	197	914800352	CONNECTOR, 4 PIN RIGHT ANGLE LOCKING RAMP	J2, J
			1	196	914800338	CONNECTOR, 50 PIN, RIGHT ANGLE	J1
				195			
				194			
				193			
			1	192	920303130	I.C., CA3130	U69
			1	191	920300580	AD580K	U68
			1	190	920300532	AD532	U65
			2	189	920204013	4013	U61, U62
			1	188	920274373	74C373	U60
			8	187	920274374	74C374	U52, U53,
				187		U54, U55, U56, U57, U58, U59	
			1	186	910800068	VM68	U45
			1	185	920204052	4052	U41
			1	184	920274906	74C906	U40
			1	183	920207541	7541KN	U38
			2	182	920207531	7531KN	U36, U37
			1	181	920204028	4028	U34
			2	180	920217541	7541JN	U33, U35
			1	179	920210074	TL074	U31,
			2	178	920204051	4051	U28, U29
			2	177	920301413	MC1413	U22, U32
			2	176	920300339	LM339	U19, U30
			5	175	920205043	HI 5043	U16, U42
				175			U48, U49, U51
			5	174	920300308	I.C., LM308	U14, U15,
				174			U20, U24, U25

LIST OF MATERIAL

A1 PWB ASSY L/M

Sierra

CODE IDENT NO. 54778

SIZE A

DRAWING NO. A03331000

SCALE

SHEET 8 OF 9

BISHOP GRAPHICS/ACCUPRESS
REORDER NO. A-0450

QTY	QTY	QTY	QTY	ITEM	PART NO.	DESCRIPTION	REF.
			2	230	819204019	WASHER, LOCK #4	
				229			
			8	228	915100179	SWAGE STANDOFF #6 X .750	
				227			
			2	226	800004089	SCREW, 4-40 X 9/16	
				225			
				224			
			1	223	910303906	TRANSISTOR, 3906	Q11
			2	222	910304392	2N4392	Q7, Q8
			1	221	910306516	2N6516	Q6
			5	220	910303904	2N3904	Q3, Q4,
				220			Q5, Q9, Q10
			1	219	910310089	TRANSISTOR, VN89AF	Q1
				218			
				217			
				216			
				215			
			2	214	909910013	TRANSFORMER, PT3099	T2, T3
			1	213	909900054	TRANSFORMER,	T1
				212			
				211			
			1	210	916400151	RIBBON CABLE	
				209			
			3	208	9126000085	REED RELAY 9205A05C1A	K11, K12
				208			K13
			10	207	9126000084	REED RELAY 925A05C2A	K1, K2, K3
				207		K4, K5, K6, K7, K8, K9, K10	

LIST OF MATERIAL

A1 PWB ASSY L/M	Sierra	SIZE A	DRAWING NO. A03331000
	CODE IDENT NO. 54778	SCALE	SHEET 9 OF 9

BISHOP GRAPHICS/ACCUPRESS
REORDER NO. A-0480

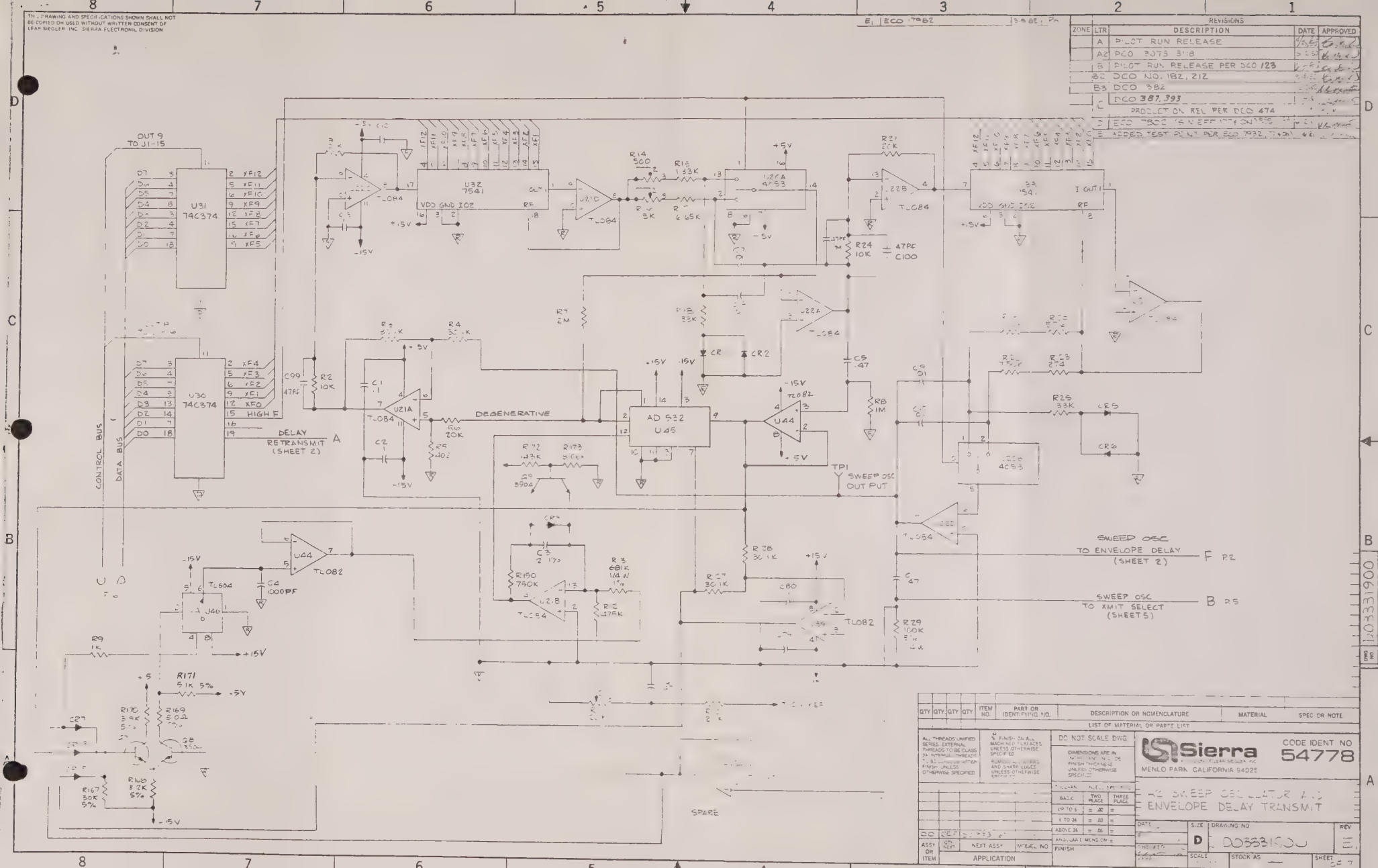
THIS DRAWING AND SPECIFICATIONS SHOWN SHALL NOT BE COPIED OR USED WITHOUT WRITTEN CONSENT OF LEAR SIEGLER INC. SIERRA ELECTRONIC DIVISION
REVISIONS
ZONE LTR DESCRIPTION DATE APPROVED
A PILOT RUN RELEASE
A2 PCO 3073 3118
B PILOT RUN RELEASE PER DCO 123
B2 DCO NO. 182, 212
B3 DCO 382
C DCO 387, 393
PRODUCTION REL PER DCO 474
D ECO 7802 IS NEFF 177 & ON
E ADDED TEST POINT PER ECO 7932
OUT 9 TO J1-15
U31 74C374
U30 74C374
U32 7541
U21A TL084
U21D TL084
U22A TL084
U22B TL084
U33 7541
U44 TL082
U46 TL604
AD 532 U45
U44 TL082
U21B TL084
U22B TL084
U22A TL084
U22D TL084
U22C TL084
U22B TL084
U39 TL082
DELAY RETRANSMIT (SHEET 2) A
DEGENERATIVE
CONTROL BUS
DATA BUS
HIGH F
TP1 SWEEP OSC OUT PUT
SWEEP OSC TO ENVELOPE DELAY (SHEET 2) F P2
SWEEP OSC TO XMIT SELECT (SHEET 5) B P5
SPARE
R14 500
R15 133K
R21 20K
R24 10K
47PF C100
R7 2M
R18 33K
C5 .47
R8 1M
R25 33K
R2 10K
C99 47PF
R6 20K
R5 402
R72 143K
R173 8.06K
Q9 3904
R150 750K
R3 681K 1/4 W
R12 475K
R28 30.1K
R27 30.1K
C80
R29 100K
C4 1000PF
R9 1K
R171 51K 5%
R170 3.9K 5%
R169 5.0Ω
R167 30K 5%
R168 8.2K 5%
+15V
-15V
+5V
-5V
QTY QTY QTY QTY ITEM NO. PART OR IDENTIFYING NO. DESCRIPTION OR NOMENCLATURE MATERIAL SPEC OR NOTE
LIST OF MATERIAL OR PARTS LIST
ALL THREADS UNIFIED SERIES EXTERNAL THREADS TO BE CLASS 2A INTERNAL THREADS TO BE CLASS 2B AFTER FINISH UNLESS OTHERWISE SPECIFIED
FINISH ON ALL MACHINED SURFACES UNLESS OTHERWISE SPECIFIED
REMOVE ALL BURRS AND SHARP EDGES UNLESS OTHERWISE SPECIFIED
DO NOT SCALE DWG
DIMENSIONS ARE IN INCHES AND INCLUDE FINISH THICKNESS UNLESS OTHERWISE SPECIFIED
BASIC TWO PLACE THREE PLACE
UP TO 6 ± .02 ±
6 TO 24 ± .03 ±
ABOVE 24 ± .06 ±
ANGULAR DIMENSION ±
FINISH
ASSY OR ITEM QTY NEXT NEXT ASSY MODEL NO
APPLICATION
Sierra
MENLO PARK CALIFORNIA 94025
CODE IDENT NO 54778
A2 SWEEP OSCILLATOR AND ENVELOPE DELAY TRANSMIT
SIZE D DRAWING NO D03331900 REV E
SCALE STOCK AS SHEET OF 7
D03331900

THIS DRAWING AND SPECIFICATIONS SHOWN SHALL NOT BE COPIED OR USED WITHOUT WRITTEN CONSENT OF LEAR SIEGLER, INC., SIERRA ELECTRONIC DIVISION.

REVISIONS				
ZONE	LTR	DESCRIPTION	DATE	APPROVED

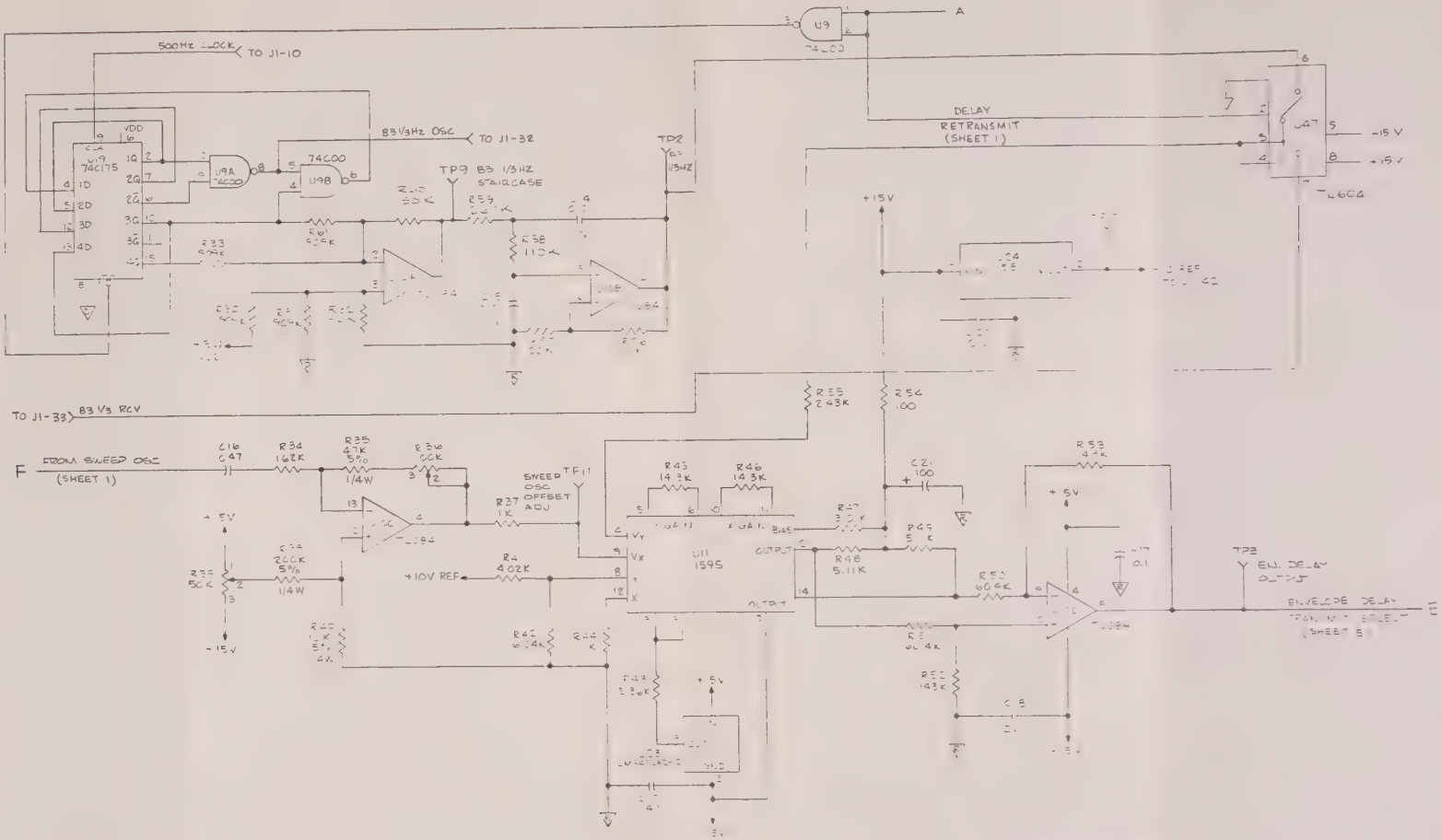

QTY	QTY	QTY	QTY	ITEM NO	PART OR IDENTIFYING NO.	DESCRIPTION OR NOMENCLATURE	MATERIAL	SPEC OR NOTE

LIST OF MATERIAL OR PARTS LIST

DO NOT SCALE DWG

DIMENSIONS ARE IN

Sierra

MENLO PARK CALIFORNIA

CODE IDENT NO 54778

AC ENVELOPE DELAY

BASE	TWO PLACE	THREE PLACE
UP TO 6	± .02	±
6 TO 24	± .01	±
ABOVE 24	± .06	±
ANGULAR DIMENSION ±		

FINISH

ASSY OR ITEM	NEXT ASSY	MODEL NO

APPLICATION

DATE

CHECKED

APPR

SIZE D

DRAWING NO D03331900

REV E1

SCALE

STOCK AS

SHEET 2 of 7

DWG NO D03331900

THIS DRAWING AND SPECIFICATIONS SHOWN SHALL NOT BE COPIED OR USED WITHOUT WRITTEN CONSENT OF LEAR SIEGLER, INC., SIERRA ELECTRONIC DIVISION.

REVISIONS

ZONE	LTR	DESCRIPTION	DATE	APPROVED

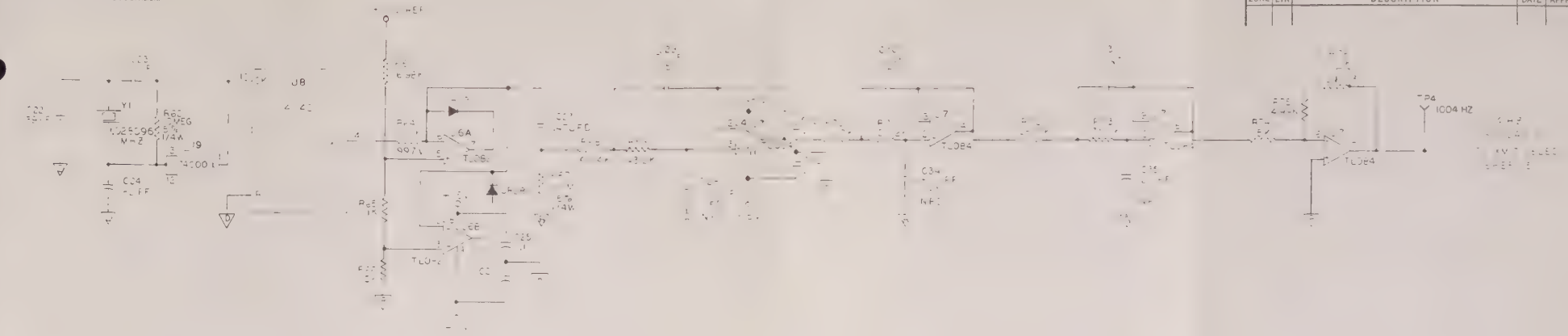

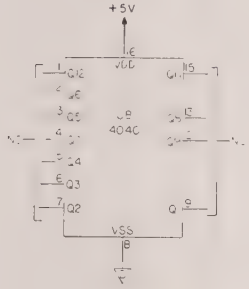

QTY	QTY	QTY	ITEM NO	PART OR IDENTIFYING NO	DESCRIPTION OR NOMENCLATURE	MATERIAL	SPEC OR NOTE

LIST OF MATERIAL OR PARTS LIST

DO NOT SCALE DWG

Sierra

CODE IDENT NO 54778

ASSY NO	QTY USED	NEXT ASSY.	MODEL NO
ITEM		APPLICATION	

FINISH

DATE

CHECKED

APPR

SIZE	DRAWING NO	REV
D	DO333900	E

SCALE

STOCK AS

SHEET

DO331900

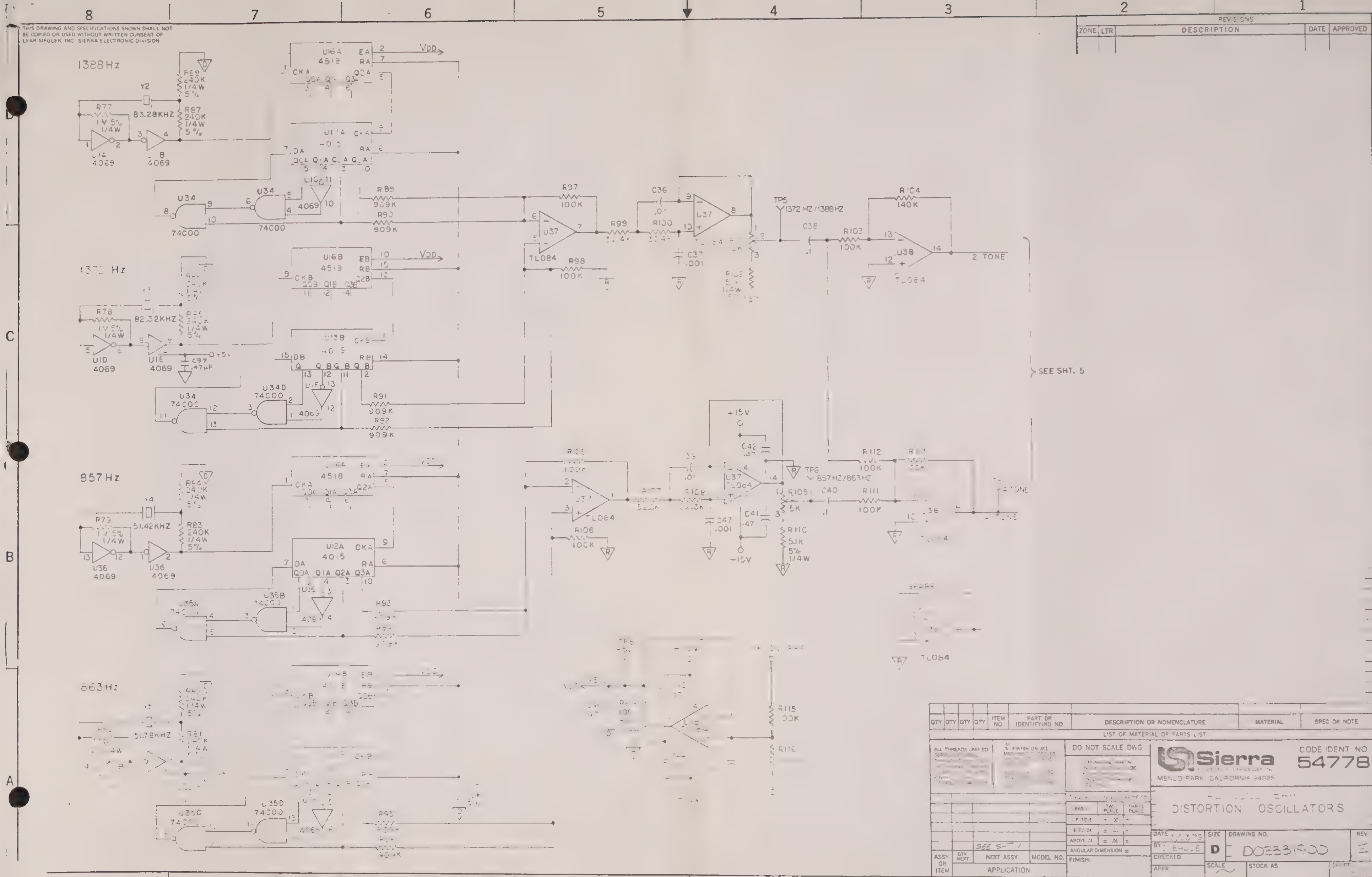

THIS DRAWING AND SPECIFICATIONS SHOWN SHALL NOT BE COPIED OR USED WITHOUT WRITTEN CONSENT OF LEAR SIEGLER, INC. SIERRA ELECTRONIC DIVISION
1388Hz
857Hz
863Hz
Y2
83.28KHZ
82.32KHZ
51.42KHZ
R77
R78
R79
R87 240K 1/4W 5%
R83 240K 1/4W 5%
U16A 4518
U16B 4518
U12A 4015
U13B 4015
U34 74C00
U34D 74C00
U35B 74C00
U35D 74C00
U1A 4069
U1B 4069
U1D 4069
U1E 4069
U36 4069
C97 .47µF
R89 909K
R90 909K
R91 909K
R92 909K
R97 100K
R98 100K
R99
R100
C36 .01
C37 .001
U37 TL084
TP5 1372 HZ / 1388 HZ
C38 .1
R103 100K
R104 140K
U38 TL084
2 TONE
SEE SHT. 5
+15V
-15V
C42
C41 .47
C47 .001
R106 100K
R109 5K
R110 5.1K 5% 1/4W
C40 .1
R111 100K
R112 100K
TP6 857HZ/863HZ
R115
R116
VDD
REVISIONS
ZONE
LTR
DESCRIPTION
DATE
APPROVED
QTY
ITEM NO.
PART OR IDENTIFYING NO
DESCRIPTION OR NOMENCLATURE
MATERIAL
SPEC OR NOTE
LIST OF MATERIAL OR PARTS LIST
DO NOT SCALE DWG
Sierra
MENLO PARK, CALIFORNIA 94025
CODE IDENT NO
54778
DISTORTION OSCILLATORS
SIZE
D
DRAWING NO.
D0333190
REV
NEXT ASSY.
MODEL NO.
APPLICATION
FINISH:
CHECKED
APPR
SCALE
STOCK AS
SHEET

THIS DRAWING AND SPECIFICATIONS SHOWN SHALL NOT BE COPIED OR USED WITHOUT WRITTEN CONSENT OF LEAR SIEGLER, INC., SIERRA ELECTRONIC DIVISION

REVISIONS

ZONE	LTR	DESCRIPTION	DATE	APPROVED

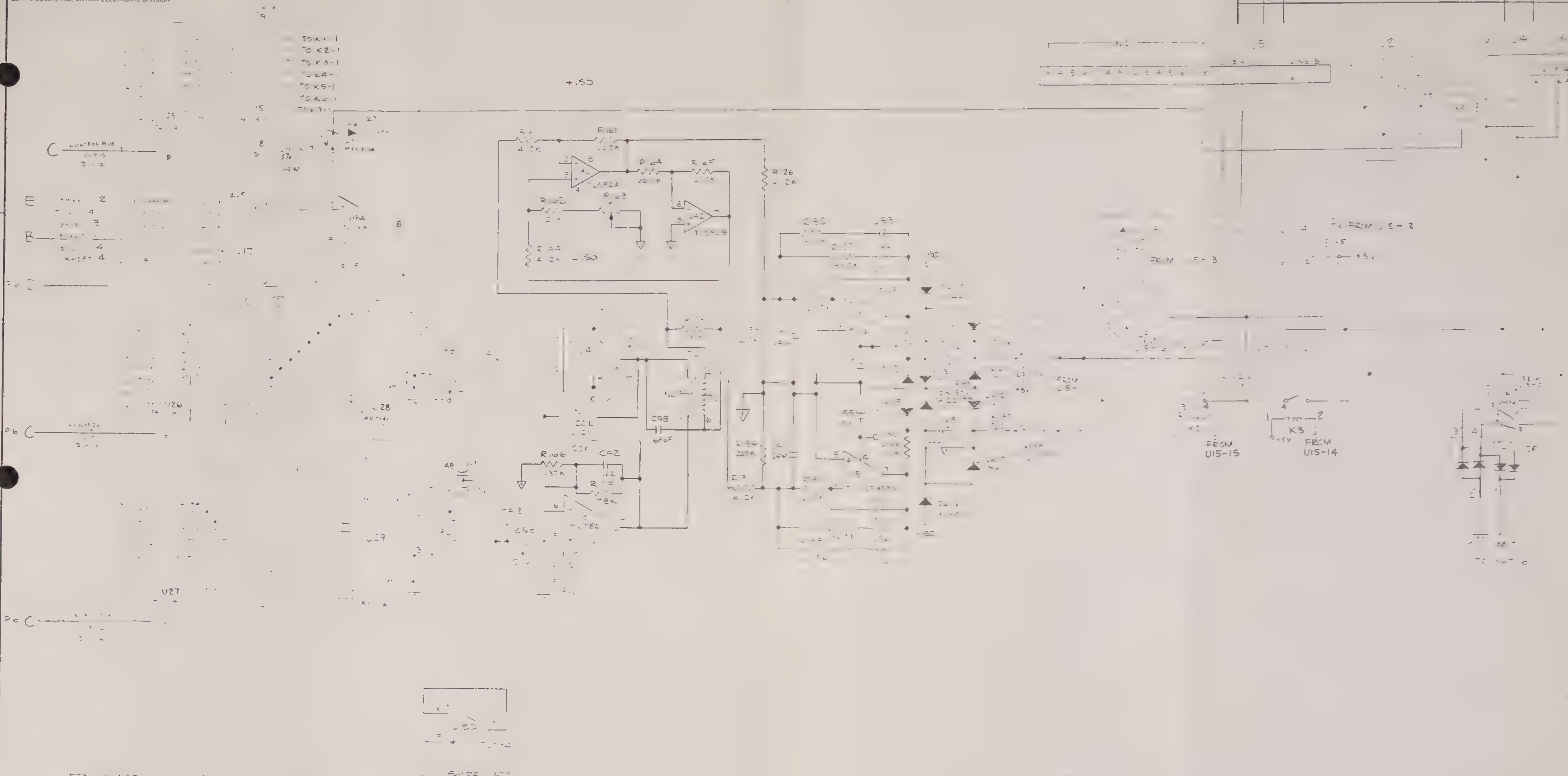

QTY	QTY	QTY	QTY	ITEM NO	PART OR IDENTIFYING NO	DESCRIPTION OR NOMENCLATURE	MATERIAL	SPEC OR NOTE

LIST OF MATERIAL OR PARTS LIST

DO NOT SCALE DWG

Sierra

CODE IDENT NO 54778

ANGULAR DIMENSION ±

FINISH

NEXT ASSY

SIZE	DRAWING NO	REV
D	DC3331900	E

SCALE

SHEET

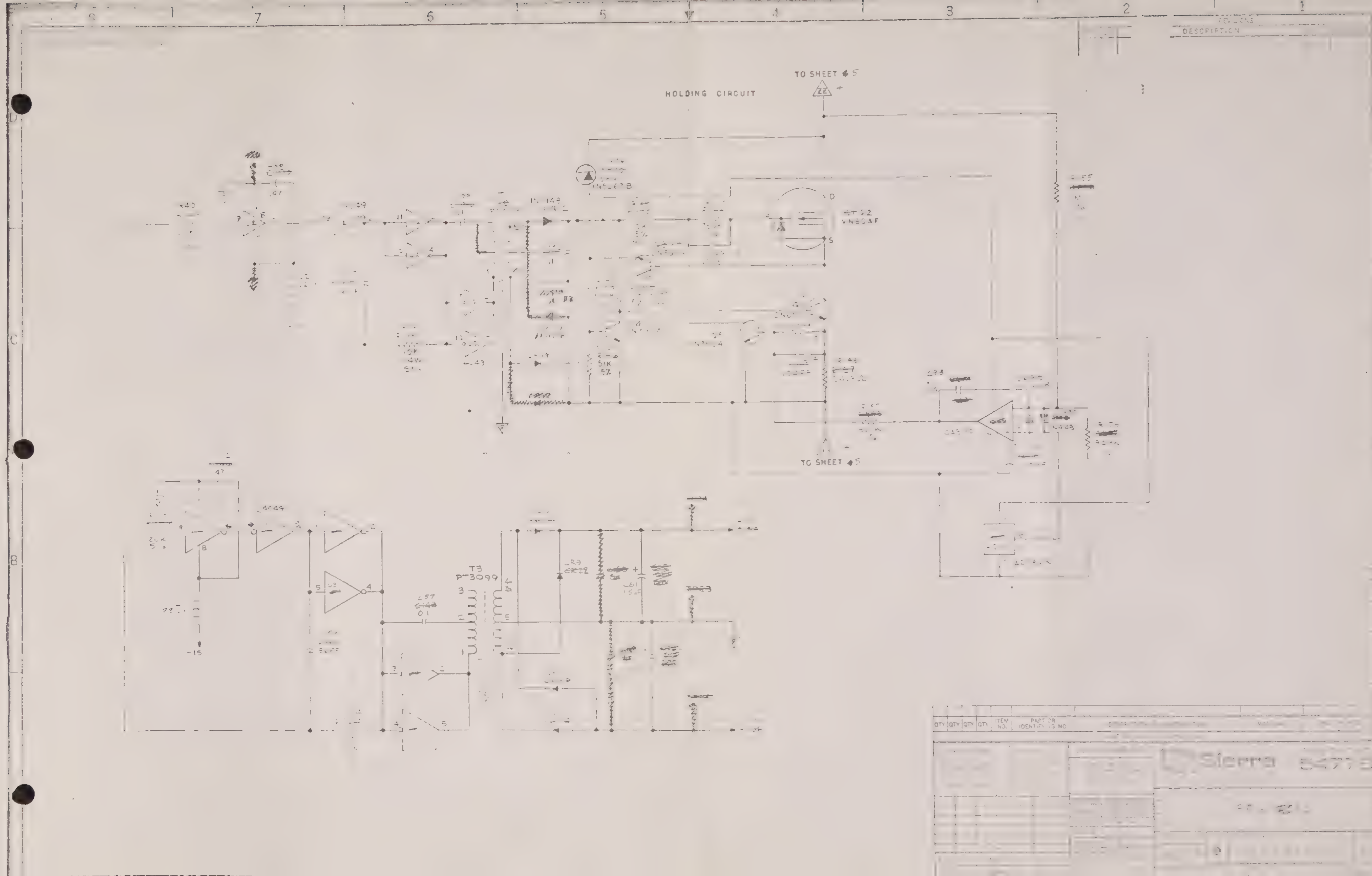

HOLDING CIRCUIT
TO SHEET #5
TO SHEET #5
VN88AF
51K
5%
T3
PT3099
-15
Sierra

THIS DRAWING AND SPECIFICATIONS SHOWN SHALL NOT BE COPIED OR USED WITHOUT WRITTEN CONSENT OF LEAR SIEGLER, INC., SIERRA ELECTRONIC DIVISION

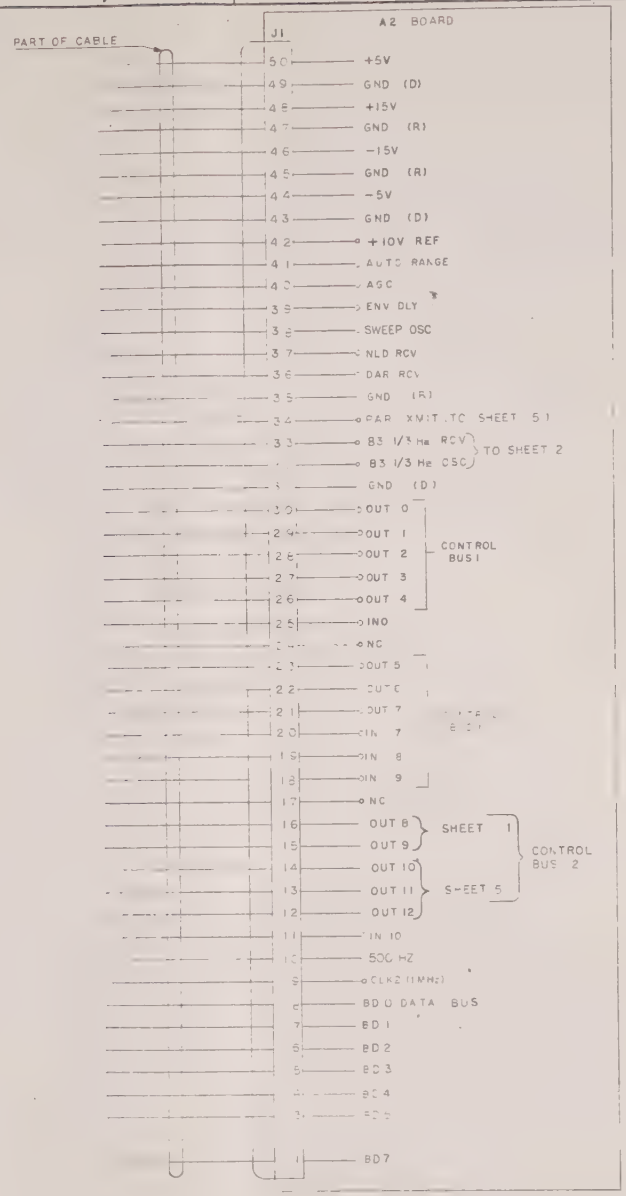

NOTES — UNLESS OTHERWISE SPECIFIED

1. ALL RESISTANCE VALUES ARE IN OHMS
2. ALL RESISTOR ARE 1/8W. ±1%
3. ALL CAPACITANCE VALUES ARE IN MICROFARADS
4. ⊽ DENOTES REF GROUND
5. ALL DIODES ARE IN4148
6. ⊽ DENOTES DIGITAL GND
7. ALL 5% RESISTORS ARE 1/4W.

ON CONNECTOR J1 ——o
DENOTES FUNCTION NOT USED ON THIS BOARD

8. PIN 8 OF U5 IS +150
PIN 4 OF U5 IS −150

[illegible]	—	[illegible]							
U9 [illegible]	—	74C00					4		
U10	—	TL084	4		11				
U11	—	MC1595L			7				
U31	—	74C374				[illegible]			
U30	U31	74C374				[illegible]			
U12	—	4015						[illegible]	[illegible]
U20	—	4053				16			
U32	—	AD754							
[illegible]									
[illegible]	—	[illegible]							
[illegible]									
[illegible]									
[illegible]									
U14		4518						8	[illegible]
U6 [illegible]		TL082	8		4				
U24	—	AD581							
U[illegible]	—	4040B				16		8	
U7	U10	TL084	4		11				
U23	—	LM[illegible]							
U25	U31	74C374				20		[illegible]	
U15	—	MC1413				9		8	
U17	—	4051		8		16	7		
U26	U31	74C374				20		[illegible]	
U27	U31	74C374				20		[illegible]	
[illegible]	U32	[illegible]	8	3					
[illegible]	U32	[illegible]	8	3					
[illegible]									
U1 [illegible]	—	[illegible]							
[illegible]									

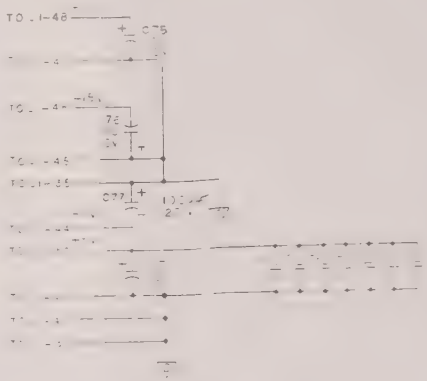

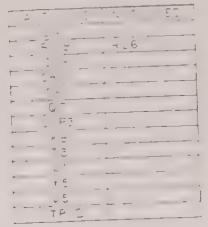

QTY	QTY	QTY	QTY	ITEM NO	PART OR IDENTIFYING NO	DESCRIPTION OR NOMENCLATURE	MATERIAL	SPEC OR NOTE

LIST OF MATERIAL OR PARTS LIST

ALL THREADS UNIFIED SERIES EXTERNAL THREADS TO BE CLASS 2A INTERNAL THREADS TO BE CLASS 2B AFTER FINISH UNLESS OTHERWISE SPECIFIED

FINISH ALL MACHINED SURFACES UNLESS OTHERWISE SPECIFIED

REMOVE ALL BURRS AND SHARP EDGES UNLESS OTHERWISE SPECIFIED

DO NOT SCALE DWG.

ARE IN INCLUDE UNLESS OTHERWISE

Sierra
MENLO PARK CALIFORNIA 94025

CODE IDENT NO. 54778

DATE

SIZE D

DRAWING NO. D03331900

THIS DRAWING AND SPECIFICATIONS SHOWN SHALL NOT BE COPIED OR USED WITHOUT WRITTEN CONSENT OF LEAR SIEGLER, INC. SIERRA ELECTRONIC DIVISION

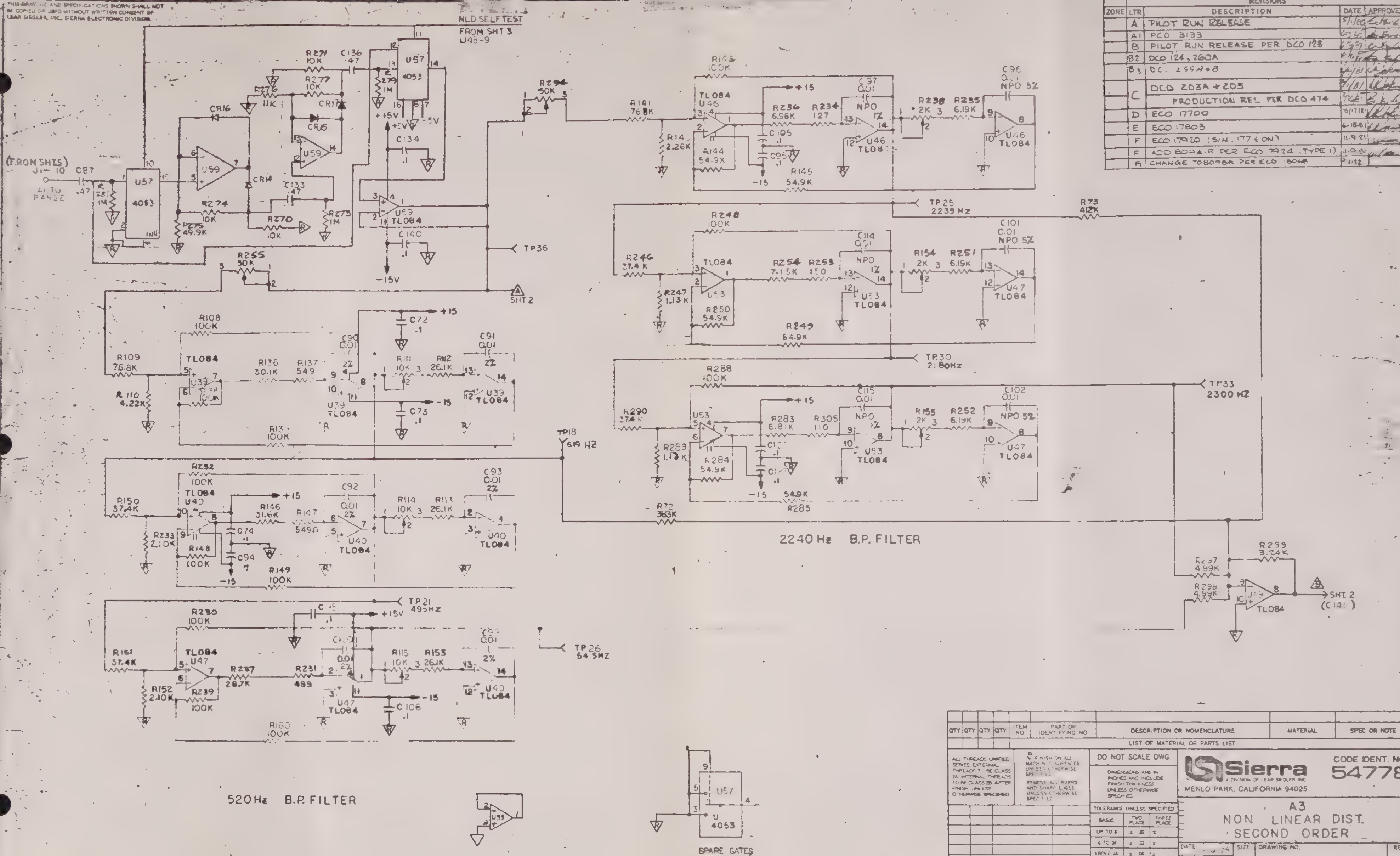

ZONE	LTR	DESCRIPTION	DATE	APPROVED
	A	PILOT RUN RELEASE	5/1/80	
	A1	PCO 3133		
	B	PILOT RUN RELEASE PER DCO 128		
	B2	DCO 124, 260A		
	B3	DC. 299A+B	/81	
	C	DCO 203A + 205	/81	
		PRODUCTION REL PER DCO 474		
	D	ECO 17700	3/17/81	
	E	ECO 17803	6-18-81	
	F	ECO 17920 (S/N. 177 & ON)	11-9-81	
	F	ADD 809A.R PER ECO 7924 .TYPE 1)	11-9-81	
	G	CHANGE TO 809BR PER ECO 18068	/82	

QTY	QTY	QTY	QTY	ITEM NO	PART OR IDENTIFYING NO	DESCRIPTION OR NOMENCLATURE	MATERIAL	SPEC OR NOTE

LIST OF MATERIAL OR PARTS LIST

ALL THREADS UNIFIED SERIES. EXTERNAL THREADS TO BE CLASS 2A INTERNAL THREADS TO BE CLASS 2B AFTER FINISH UNLESS OTHERWISE SPECIFIED

FINISH ON ALL MACHINED SURFACES UNLESS OTHERWISE SPECIFIED

REMOVE ALL BURRS AND SHARP EDGES UNLESS OTHERWISE SPECIFIED

DO NOT SCALE DWG.

DIMENSIONS ARE IN INCHES AND INCLUDE FINISH THICKNESS UNLESS OTHERWISE SPECIFIED

TOLERANCE UNLESS SPECIFIED

BASIC	TWO PLACE	THREE PLACE
UP TO 6	± .02	±
6 TO 24	± .03	±
ABOVE 24	± .06	±

ANGULAR DIMENSION ±

FINISH

ASSY OR ITEM	QTY NEXT	NEXT ASSY	MODEL NO
00	REF	D03332100	

APPLICATION

Sierra
A DIVISION OF LEAR SIEGLER INC
MENLO PARK, CALIFORNIA 94025

CODE IDENT. NO. 54778

A3
NON LINEAR DIST.
SECOND ORDER

SIZE: D | DRAWING NO. D03332400 | REV E1

SCALE ~ | STOCK AS — | SHEET 1 OF

THIS DRAWING AND SPECIFICATIONS SHOWN SHALL NOT BE COPIED OR USED WITHOUT WRITTEN CONSENT OF LEAR SIEGLER, INC., SIERRA ELECTRONIC DIVISION.

REVISIONS			
ZONE	LTR	DESCRIPTION	DATE	APPROVED
		SEE SHT ONE		

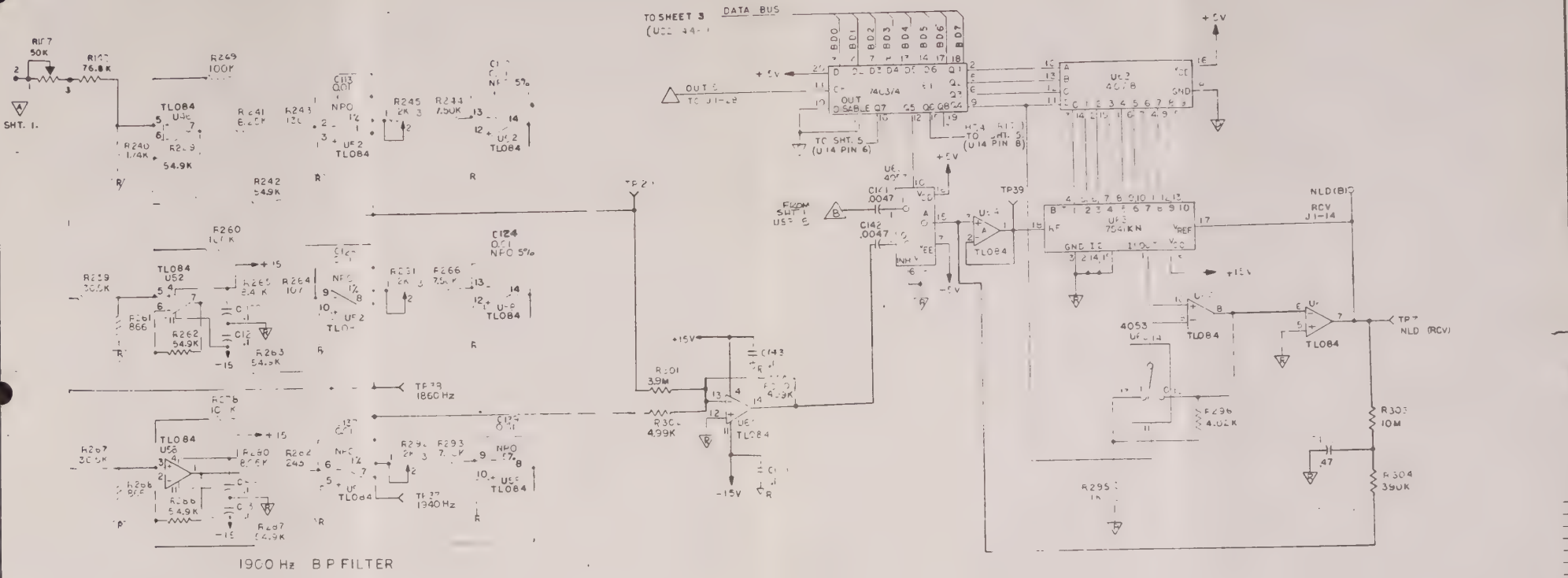

QTY	QTY	QTY	QTY	ITEM NO	PART OR IDENTIFYING NO.	DESCRIPTION OR NOMENCLATURE	MATERIAL	SPEC OR NOTE
						LIST OF MATERIAL OR PARTS LIST		

ALL THREADS UNIFIED SERIES EXTERNAL THREADS TO BE CLASS 2A INTERNAL THREADS TO BE CLASS 2B AFTER FINISH UNLESS OTHERWISE SPECIFIED

63 μ FINISH ON ALL MACHINED SURFACES UNLESS OTHERWISE SPECIFIED
REMOVE ALL BURRS AND SHARP EDGES UNLESS OTHERWISE SPECIFIED

DO NOT SCALE DWG.
DIMENSIONS ARE IN INCHES AND INCLUDE FINISH THICKNESS UNLESS OTHERWISE SPECIFIED

TOLERANCE UNLESS SPECIFIED		
BASIC	TWO PLACE	THREE PLACE
UP TO 6	± .02	±
6 TO 24	± .03	±
ABOVE 24	± .06	±
ANGULAR DIMENSION ±		
FINISH:		

Sierra
A DIVISION OF LEAR SIEGLER INC
MENLO PARK CALIFORNIA 94025

CODE IDENT NO 54778

A 3
NON LINEAR DIST.
THIRD ORDER

ASSY OR ITEM	QTY NEXT	NEXT ASSY.	MODEL NO.
		APPLICATION	

DATE	SIZE	DRAWING NO.	REV
BY	D	D03332400	F1
CHECKED			
APPR	SCALE	STOCK AS	SHEET 2 OF 11

D03332400

THIS DRAWING AND SPECIFICATIONS SHOWN SHALL NOT BE COPIED OR USED WITHOUT WRITTEN CONSENT OF LEAR SIEGLER, INC., SIERRA ELECTRONIC DIVISION.

REVISIONS				
ZONE	LTR	DESCRIPTION	DATE	APPROVED
		SEE SHT ONE		

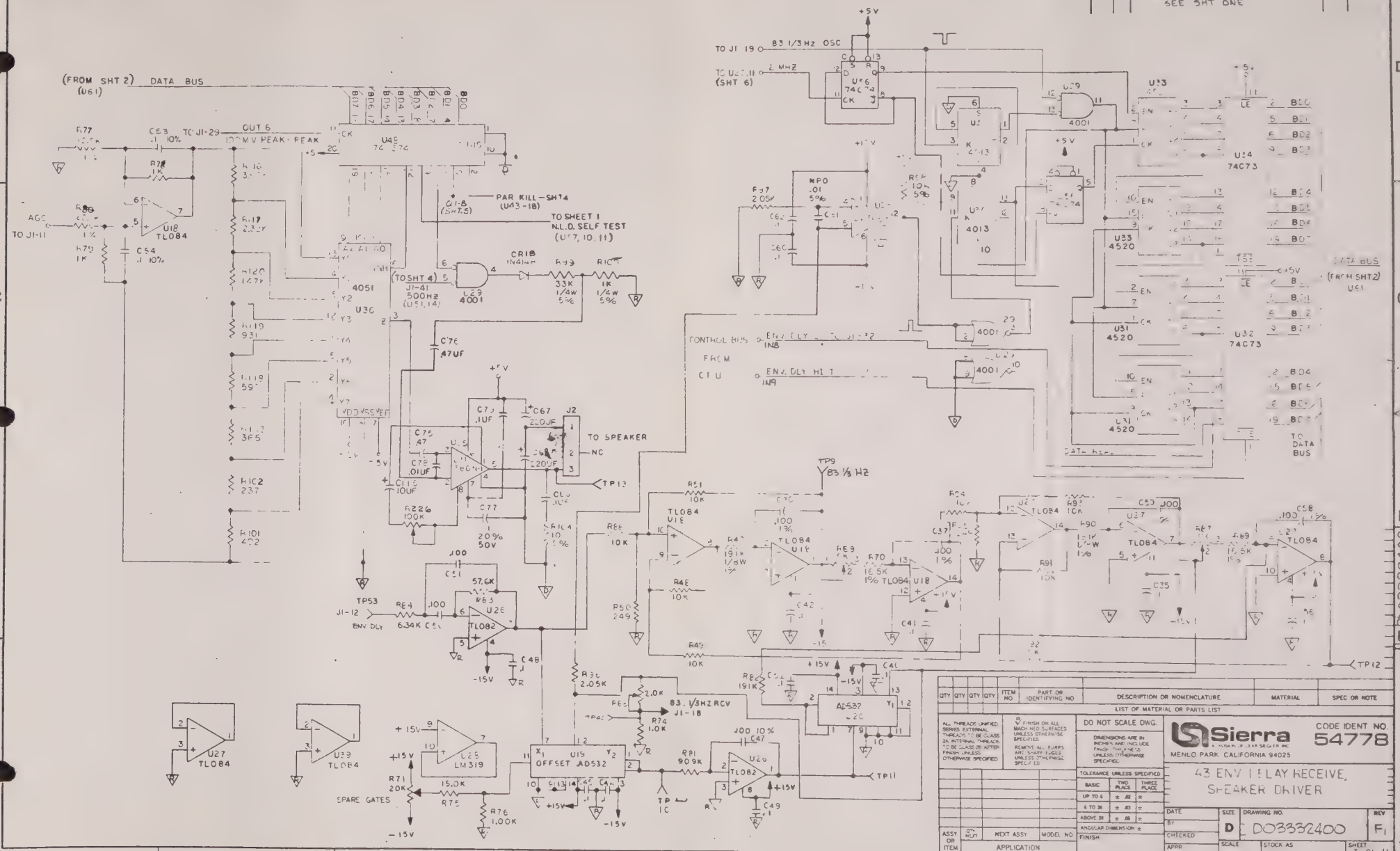

QTY	QTY	QTY	QTY	ITEM NO	PART OR IDENTIFYING NO	DESCRIPTION OR NOMENCLATURE	MATERIAL	SPEC OR NOTE

LIST OF MATERIAL OR PARTS LIST

ALL THREADS UNIFIED SERIES EXTERNAL THREADS TO BE CLASS 2A INTERNAL THREADS TO BE CLASS 2B AFTER FINISH UNLESS OTHERWISE SPECIFIED

FINISH ON ALL MACHINED SURFACES UNLESS OTHERWISE SPECIFIED

REMOVE ALL BURRS AND SHARP EDGES UNLESS OTHERWISE SPECIFIED

DO NOT SCALE DWG.

DIMENSIONS ARE IN INCHES AND INCLUDE FINISH THICKNESS UNLESS OTHERWISE SPECIFIED

TOLERANCE UNLESS SPECIFIED

BASIC	TWO PLACE	THREE PLACE
UP TO 6	± .02	±
6 TO 24	± .03	±
ABOVE 24	± .05	±
ANGULAR DIMENSION ±		
FINISH		

ASSY OR ITEM	QTY NEXT	NEXT ASSY	MODEL NO
APPLICATION			

Sierra
A DIVISION OF LEAR SIEGLER INC
MENLO PARK CALIFORNIA 94025

CODE IDENT NO. 54778

43 ENV DELAY RECEIVE, SPEAKER DRIVER

DATE	SIZE	DRAWING NO.	REV
BY	D	D03332400	F1
CHECKED			
APPR	SCALE	STOCK AS	SHEET 3 OF 11

D03332400

THIS DRAWING AND SPECIFICATIONS SHOWN SHALL NOT BE COPIED OR USED WITHOUT WRITTEN CONSENT OF LEAR SIEGLER, INC., SIERRA ELECTRONIC DIVISION.

REVISIONS				
ZONE	LTR	DESCRIPTION	DATE	APPROVED
		SEE SHT ONE		

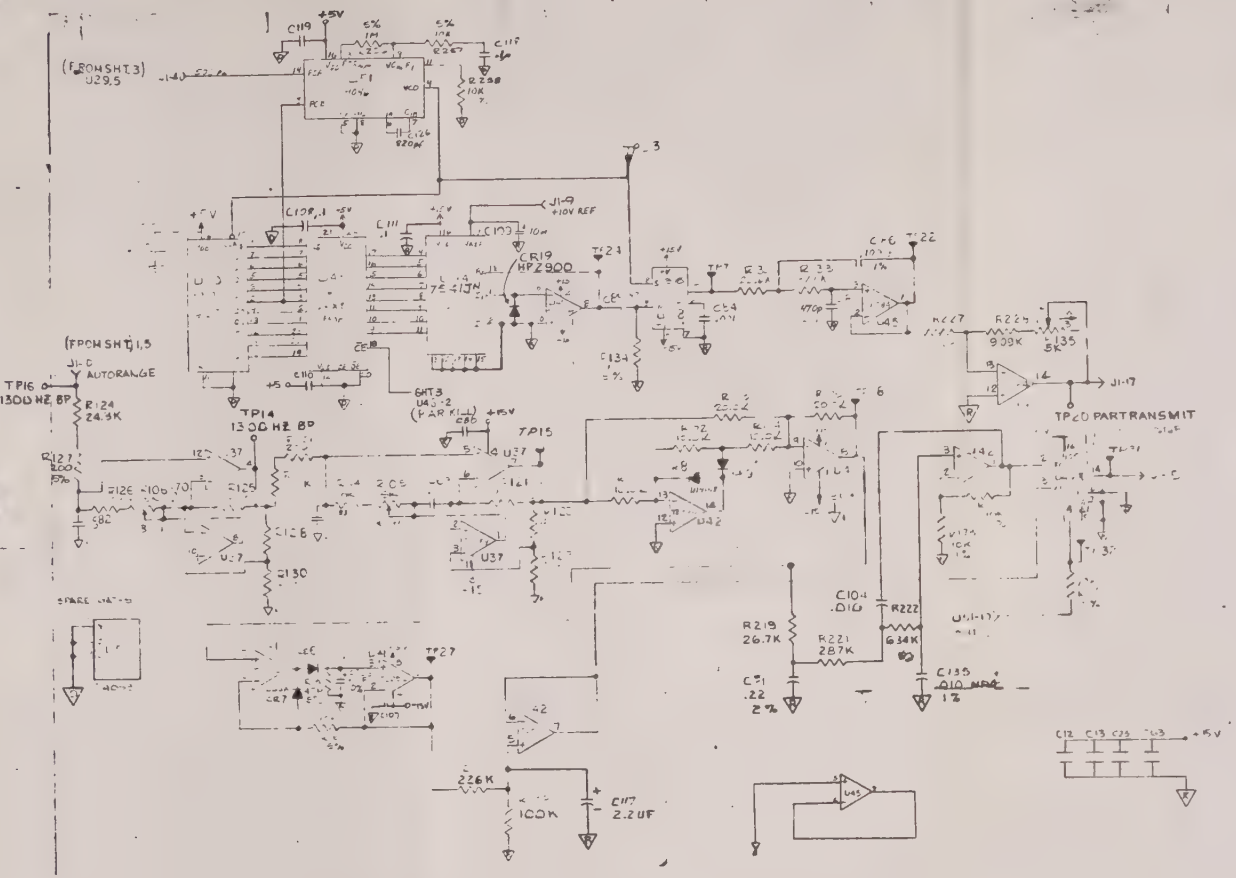

QTY	QTY	QTY	ITEM NO.	PART OR IDENTIFYING NO.	DESCRIPTION OR NOMENCLATURE	MATERIAL	SPEC OR NOTE
					LIST OF MATERIAL OR PARTS LIST		

ALL THREADS UNIFIED SERIES, EXTERNAL THREADS TO BE CLASS 2A, INTERNAL THREADS TO BE CLASS 2B AFTER FINISH, UNLESS OTHERWISE SPECIFIED

63 √ FINISH ON ALL MACHINED SURFACES UNLESS OTHERWISE SPECIFIED.
REMOVE ALL BURRS AND SHARP EDGES UNLESS OTHERWISE SPECIFIED

DO NOT SCALE DWG.
DIMENSIONS ARE IN INCHES AND INCLUDE FINISH THICKNESS UNLESS OTHERWISE SPECIFIED

TOLERANCE UNLESS SPECIFIED		
BASIC	TWO PLACE	THREE PLACE
UP TO 6	± .02	±
6 TO 24	± .03	±
ABOVE 24	± .06	±
ANGULAR DIMENSION ±		
FINISH		

Sierra — A DIVISION OF LEAR SIEGLER INC.
MENLO PARK, CALIFORNIA 94025
CODE IDENT. NO. 54778

A3 PWB
PAR OPTION

ASSY OR ITEM	QTY NEXT	NEXT ASSY	MODEL NO.
		APPLICATION	

DATE
BY
CHECKED
APPR

SIZE	DRAWING NO.	REV.
D	D03332400	F1
SCALE	STOCK AS	SHEET 4 OF 11

D03332400

THIS DRAWING AND SPECIFICATIONS SHOWN SHALL NOT BE COPIED OR USED WITHOUT WRITTEN CONSENT OF LEAR SIEGLER, INC., SIERRA ELECTRONIC DIVISION.

REVISIONS				
ZONE	LTR	DESCRIPTION	DATE	APPROVED
		SEE SHT ONE		

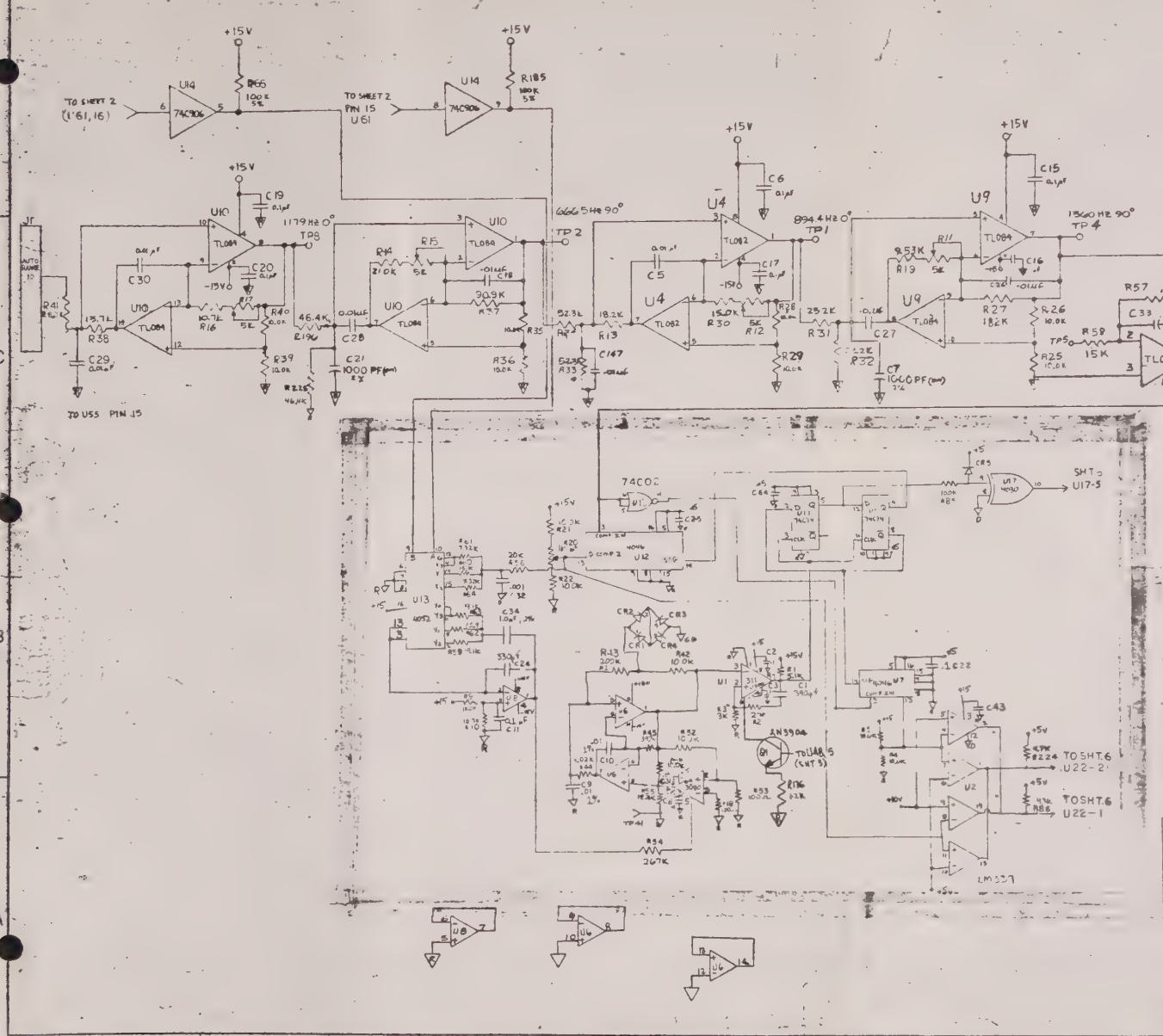

QTY.	QTY.	QTY.	QTY.	ITEM NO.	PART OR IDENTIFYING NO.	DESCRIPTION OR NOMENCLATURE	MATERIAL	SPEC OR NOTE

LIST OF MATERIAL OR PARTS LIST

ALL THREADS UNIFIED SERIES EXTERNAL THREADS TO BE CLASS 2A INTERNAL THREADS TO BE CLASS 2B AFTER FINISH UNLESS OTHERWISE SPECIFIED

FINISH ON ALL MACHINED SURFACES UNLESS OTHERWISE SPECIFIED

DO NOT SCALE DWG.

DIMENSIONS ARE IN INCHES AND INCLUDE FINISH THICKNESS UNLESS OTHERWISE SPECIFIED

TOLERANCE UNLESS SPECIFIED

BASIC	TWO PLACE	THREE PLACE
0.75	± .01	±
4.75	± .02	±
ANGULAR DIMENSION ±		

FINISH

Sierra
DIVISION OF LEAR SIEGLER INC.
MENLO PARK CALIFORNIA 94025

CODE IDENT NO 54778

809 A3 PWB

SIZE D DRAWING NO DC[illegible]

DATE
BY
CHECKED

ASSY.	QTY. NEXT	NEXT ASSY.	MODEL NO.

D03332400

THIS DRAWING AND SPECIFICATIONS SHOWN SHALL NOT BE COPIED OR USED WITHOUT WRITTEN CONSENT OF LEAR SIEGLER, INC., SIERRA ELECTRONIC DIVISION.

REVISIONS				
ZONE	LTR	DESCRIPTION	DATE	APPROVED
		SEE SHT ONE		

U17-10 (SHT 5)

U56-11 (SHT 3)

PART OF J1

IN Ø 26

IN 7 31

CLK 2 2 MHZ 42

FROM SHT 5: U2-1,13; U2-2 14

U23 74C74

U21 74C74

U22 74C00

U24 74C00

U25 74LS193

U54 74LS193

U55 74C374

U16 80C95

U15 74C02

U17 4030

C55

C65 10 PF

R200 100 Ω

R67 5.1K

C40 .01 UF

R66 5.1K

C39 .001 UF

+5V

FROM SHT 2,3 PART OF J1

43 BD0
44 BD1
45 BD2
46 BD3
47 BD4
48 BD5
49 BD6
50 BD7

QTY.	QTY.	QTY.	QTY.	ITEM NO.	PART OR IDENTIFYING NO.	DESCRIPTION OR NOMENCLATURE	MATERIAL	SPEC OR NOTE
						LIST OF MATERIAL OR PARTS LIST		

ALL THREADS UNIFIED SERIES: EXTERNAL THREADS TO BE CLASS 2A INTERNAL THREADS TO BE CLASS 2B AFTER FINISH UNLESS OTHERWISE SPECIFIED

63 FINISH ON ALL MACHINED SURFACES UNLESS OTHERWISE SPECIFIED

REMOVE ALL BURRS AND SHARP EDGES UNLESS OTHERWISE SPECIFIED

DO NOT SCALE DWG.

DIMENSIONS ARE IN INCHES AND INCLUDE FINISH THICKNESS UNLESS OTHERWISE SPECIFIED

TOLERANCE UNLESS SPECIFIED		
BASIC	TWO PLACE	THREE PLACE
UP TO 6	± .01	±
6 TO 24	± .01	±
ABOVE 24	± .01	±
ANGULAR DIMENSION	±	

FINISH:

ASSY OR ITEM	QTY. NEXT	NEXT ASSY.	MODEL NO.
		APPLICATION	

Sierra — A DIVISION OF LEAR SIEGLER INC.
MENLO PARK, CALIFORNIA 94025

CODE IDENT. NO. 54778

Ø JITTER COUNTER
A3 PWB SCHEMATIC

DATE	BY	CHECKED	APPR
9-28-79	D. BURGH		

SIZE	DRAWING NO.	REV.
D	D03332400	F1

SCALE — STOCK AS — SHEET 6 OF 11

D03332400

...SPECIFICATIONS SHOWN SHALL NOT BE COPIED IN WHOLE OR IN PART WITHOUT WRITTEN CONSENT OF LEAR SIEGLER INC., SIERRA ELECTRONIC DIVISION.

REVISIONS				
ZONE	LTR	DESCRIPTION	DATE	APPROVED
		SEE SHT ONE		

PIN NUMBERS ON OTHER BOARDS / PIN NUMBERS ON A3 BOARD J1

	J1	
50	1	+5V
49	2	GND (D)
48	3	+15V
47	4	GND (R)
46	5	−15V
45	6	GND(R)
44	7	−5V
43	8	GND(D)
42	9	+10V REF
41	10	AUTO RANGE
40	11	AGC
39	12	ENV. DLY
38	13	SWEEP OSC
37	14	MLD RCV
36	15	PAR RCV
35	16	GND(R)
34	17	PAR XMIT
33	18	83 1/3Hz RCV
32	19	83 1/3Hz OSC
31	20	GND (D)
30	21	OUT 0 — CONTROL BUS 1
29	22	OUT 1
28	23	OUT 2
27	24	OUT 3
26	25	OUT 4
25	26	IN 0
24	27	NC
23	28	OUT 5 — CONTROL BUS 3
22	29	OUT 6
21	30	OUT 7
20	31	IN 7
19	32	IN 8 DLY COUNT LSB
18	33	IN 9 DLY COUNT MSB
17	34	NC
16	35	OUT 8 — CONTROL BUS 2
15	36	OUT 9
14	37	OUT 10
13	38	OUT 11
12	39	OUT 12
11	40	IN 10
10	41	500Hz
9	42	CLK (2MHz)
8	43	BD0 — DATA BUS
7	44	BD1
6	45	BD2
5	46	BD3
4	47	BD4
3	48	BD5
2	49	BD6
1	50	BD7

NOTES — UNLESS OTHERWISE SPECIFIED

1. ALL RESISTANCE VALUES ARE IN OHMS.
2. ALL RESISTORS ARE 1/8W. ± 1%.
3. ALL 5% RESISTORS ARE 1/4W.
4. ⏚ DENOTES REF GROUND
5. ⏚ DENOTES DIGITAL GROUND.
6. ALL DIODES ARE IN4148.
7. ALL CAPACITANCE VALUES ARE IN MICROFARADS.
8. ON CONNECTOR J1 —● DENOTES FUNCTION NOT USED ON THIS BOARD.

A3 BOARD I.C. POWER PIN OUT

REF DESIG	SAME TYPE AS	I C TYPE	+15	GND (R)	−15V	+5V	−5V	GND (D)
U36		4051	—	8	—	16	7	—
U35		LM386N	—	—	—	6	—	4
U6		TL084	4	—	11	—	—	—
U28		LM319	11	3	6	—	—	8
U29		4001	—	—	—	14	—	7
U30		4013	—	—	—	14	—	7
U48		74C374	—	—	—	20	—	10
U31		4520	—	—	—	16	—	8
U32		74C373	—	—	—	20	—	10
U33		4520	—	—	—	16	—	8
U34		74C373	—	—	—	20	—	10
U9		TL084	4	—	11	—	—	—
U10		TL084	4	—	11	—	—	—
U18		TL084	4	—	11	—	—	—
U59		TL084	4	—	11	—	—	—
U39		TL084	4	—	11	—	—	—
U40		TL084	4	—	11	—	—	—
U47		4053	—	8	—	16	7	—
U46		TL084	4	—	11	—	—	—
U53		TL084	4	—	11	—	—	—
U57		4053	—	8	—	16	7	—
U55		74C374	—	—	—	20	—	10
U62		4028	—	—	—	16	—	8
U63		7541	16	3	—	—	—	—
U52		TL084	4		11			

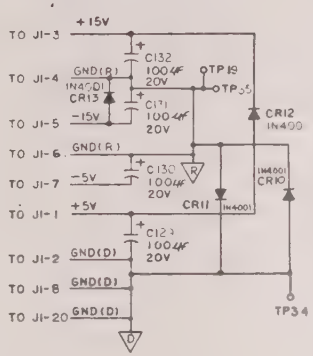

REF DESIGNATION	
LAST USED	NOT USED
U63	C137
C137	CR17
CR17	R305
R305	J2
J2	TP41
TP41	

QTY.	QTY.	QTY.	QTY.	ITEM NO.	PART OR IDENTIFYING NO.	DESCRIPTION OR NOMENCLATURE	MATERIAL	SPEC OR NOTE

LIST OF MATERIAL OR PARTS LIST

ALL THREADS UNIFIED SERIES, EXTERNAL THREADS TO BE CLASS 2A, INTERNAL THREADS TO BE CLASS 2B AFTER FINISH, UNLESS OTHERWISE SPECIFIED

DO NOT SCALE DWG.

DIMENSIONS ARE IN INCHES AND INCLUDE FINISH THICKNESS UNLESS OTHERWISE SPECIFIED

TOLERANCE UNLESS SPECIFIED

BASIC	TWO PLACE	THREE PLACE
UP TO 6	± .02	±
6 TO 24	± .03	±
ABOVE 24	± .06	±
ANGULAR DIMENSION	±	

FINISH

Sierra — A DIVISION OF LEAR SIEGLER, INC. — MENLO PARK, CALIFORNIA 94025

CODE IDENT NO 54778

809A A3 PWB

DATE	SIZE	DRAWING NO.	REV.
BY D. BRUCE	D	D03332400	F1
CHECKED	SCALE	STOCK AS	SHEET 7 OF 14
APPR			

ASSY OR ITEM | QTY. NEXT ASSY | MODEL NO | APPLICATION

D03332400

THIS DRAWING AND SPECIFICATIONS SHOWN SHALL NOT BE COPIED OR USED WITHOUT WRITTEN CONSENT OF LEAR SIEGLER, INC., SIERRA ELECTRONIC DIVISION.

REVISIONS				
ZONE	LTR	DESCRIPTION	DATE	APPROVED
		SEE SHT ONE		

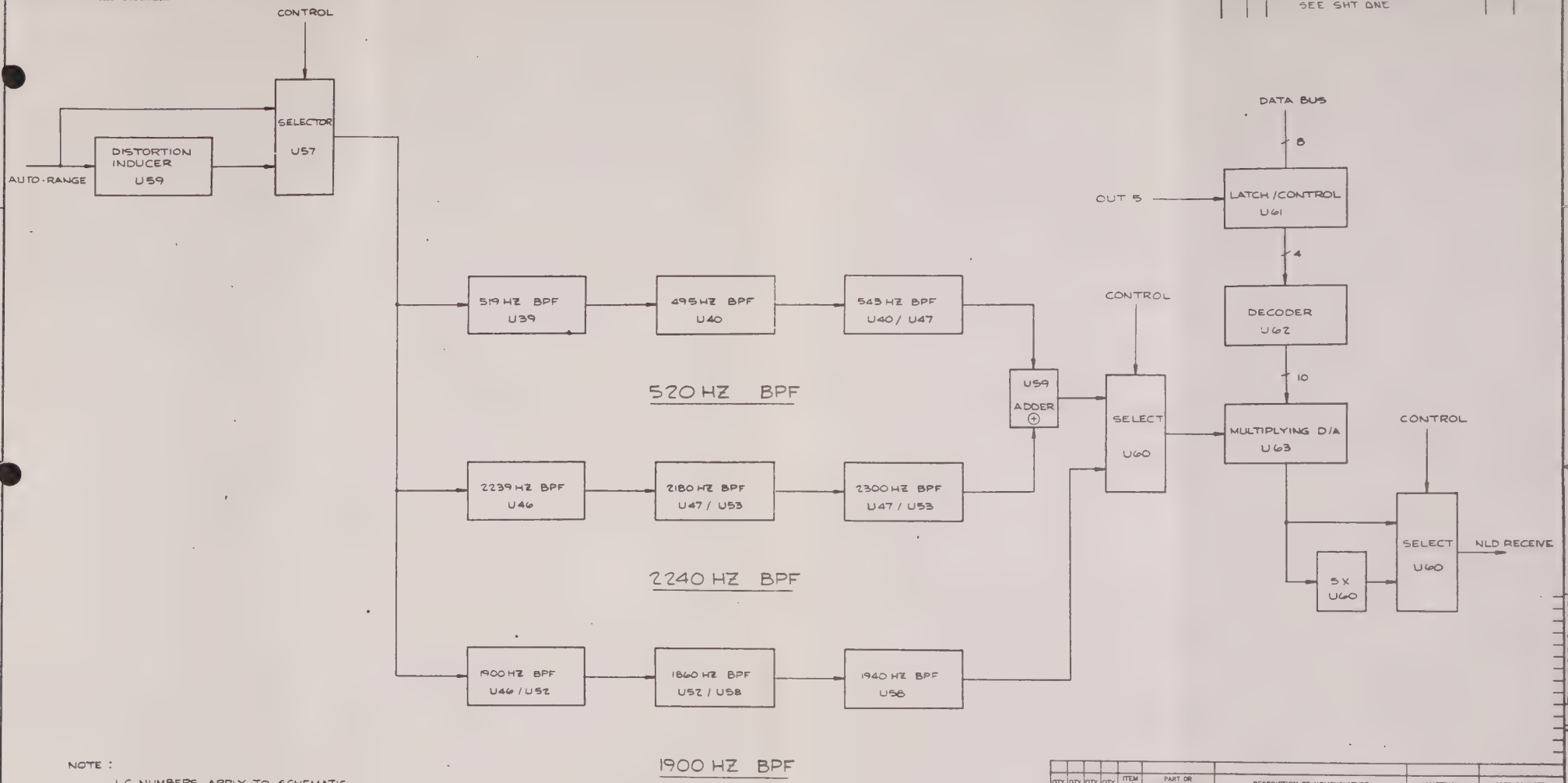

NOTE :

- I.C NUMBERS APPLY TO SCHEMATIC REV. B2.

QTY	QTY	QTY	QTY	ITEM NO	PART OR IDENTIFYING NO.	DESCRIPTION OR NOMENCLATURE	MATERIAL	SPEC OR NOTE
						LIST OF MATERIAL OR PARTS LIST		

ALL THREADS UNIFIED SERIES: EXTERNAL THREADS TO BE CLASS 2A. INTERNAL THREADS TO BE CLASS 2B AFTER FINISH UNLESS OTHERWISE SPECIFIED

63 FINISH ON ALL MACHINED SURFACES UNLESS OTHERWISE SPECIFIED.
REMOVE ALL BURRS AND SHARP EDGES UNLESS OTHERWISE SPECIFIED

DO NOT SCALE DWG.

DIMENSIONS ARE IN INCHES AND INCLUDE FINISH THICKNESS UNLESS OTHERWISE SPECIFIC.

TOLERANCE UNLESS SPECIFIED		
BASIC	TWO PLACE	THREE PLACE
UP TO 6	± .02	±
6 TO 24	± .03	±
ABOVE 24	± .06	±
ANGULAR DIMENSION	±	

FINISH

Sierra — A DIVISION OF LEAR SIEGLER INC.
MENLO PARK CALIFORNIA 94025

CODE IDENT NO. 54778

809A, A3 BD.
NON-LINEAR DISTORTION

ASSY OR ITEM	QTY NEXT	NEXT ASSY	MODEL NO.
		APPLICATION	

DATE 5-10-81
BY NGA LE
CHECKED
APPR

SIZE D | DRAWING NO. DO3332400 | REV. F1

SCALE | STOCK AS | SHEET 8 OF 11

DO3332400

THIS DRAWING AND SPECIFICATIONS SHOWN SHALL NOT BE COPIED OR USED WITHOUT WRITTEN CONSENT OF LEAR SIEGLER, INC., SIERRA ELECTRONIC DIVISION.

REVISIONS				
ZONE	LTR	DESCRIPTION	DATE	APPROVED
		SEE SHT ONE		

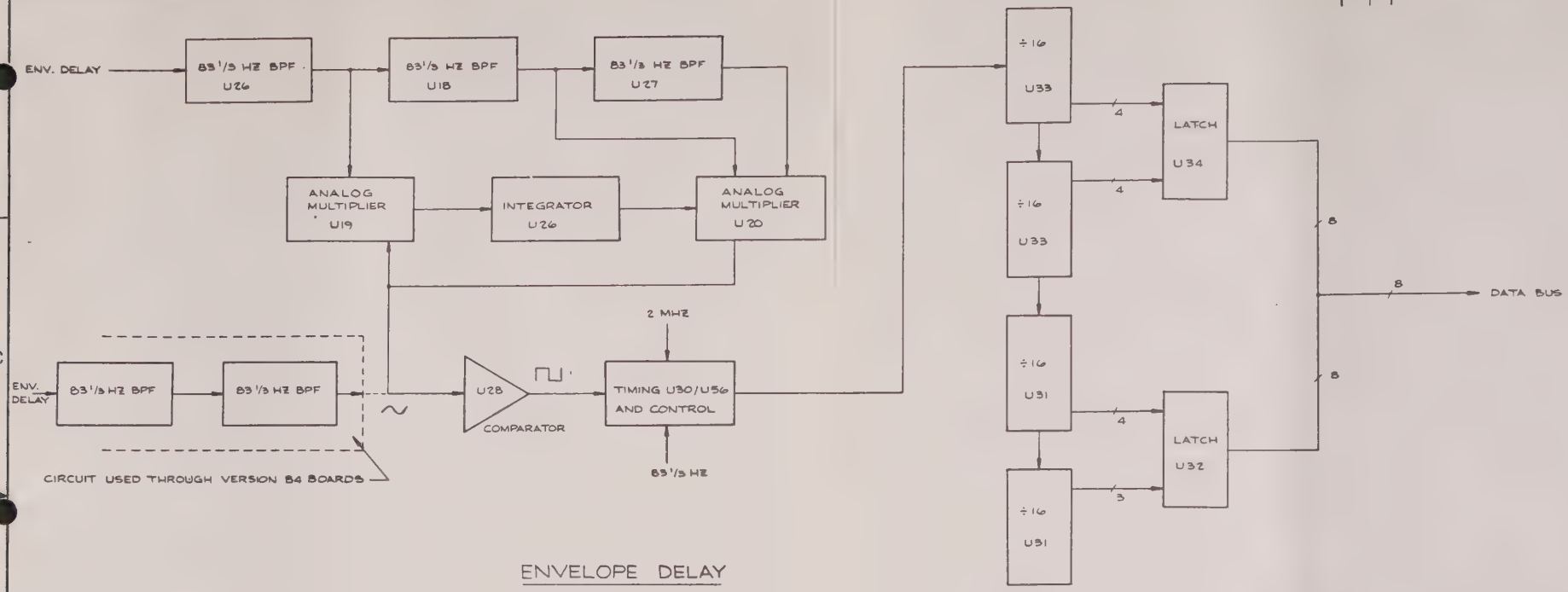

ENVELOPE DELAY

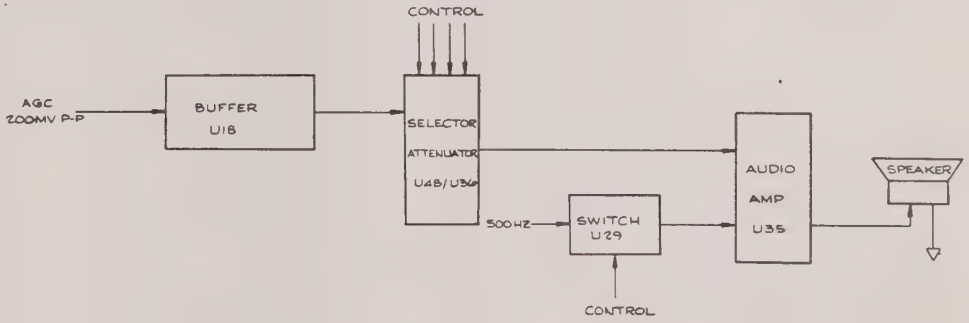

AUDIO CIRCUIT

QTY	QTY	QTY	QTY	ITEM NO.	PART OR IDENTIFYING NO.	DESCRIPTION OR NOMENCLATURE	MATERIAL	SPEC OR NOTE
						LIST OF MATERIAL OR PARTS LIST		

ALL THREADS UNIFIED SERIES EXTERNAL THREADS TO BE CLASS 2A INTERNAL THREADS TO BE CLASS 2B AFTER FINISH UNLESS OTHERWISE SPECIFIED

63 FINISH ON ALL MACH. MTD. SURFACES UNLESS OTHERWISE SPECIFIED

REMOVE ALL BURRS AND SHARP EDGES UNLESS OTHERWISE SPECIFIED

DO NOT SCALE DWG.

DIMENSIONS ARE IN INCHES AND INCLUDE FINISH THICKNESS UNLESS OTHERWISE SPECIFIED

TOLERANCE UNLESS SPECIFIED		
BASIC	TWO PLACE	THREE PLACE
UP TO 6	± .01	±
6 TO 24	± .03	±
ABOVE 24	± .06	±
ANGULAR DIMENSION ±		

FINISH

Sierra
A DIVISION OF LEAR SIEGLER INC
MENLO PARK CALIFORNIA 94025

CODE IDENT. NO. 54778

809A, A3 BD
ENVELOPE DELAY
AUDIO CIRCUIT

DATE	SIZE	DRAWING NO.	REV.
6-8	D	03332400	F1

BY NGA LE
CHECKED
APPR
SCALE
STOCK AS
SHEET 9 OF 11

ASSY OR ITEM NO. | NEXT ASSY | MODEL NO
APPLICATION

THIS DRAWING AND SPECIFICATIONS SHOWN SHALL NOT BE COPIED OR USED WITHOUT WRITTEN CONSENT OF LEAR SIEGLER, INC., SIERRA ELECTRONIC DIVISION.

REVISIONS				
ZONE	LTR	DESCRIPTION	DATE	APPROVED
		SEE SHT ONE		

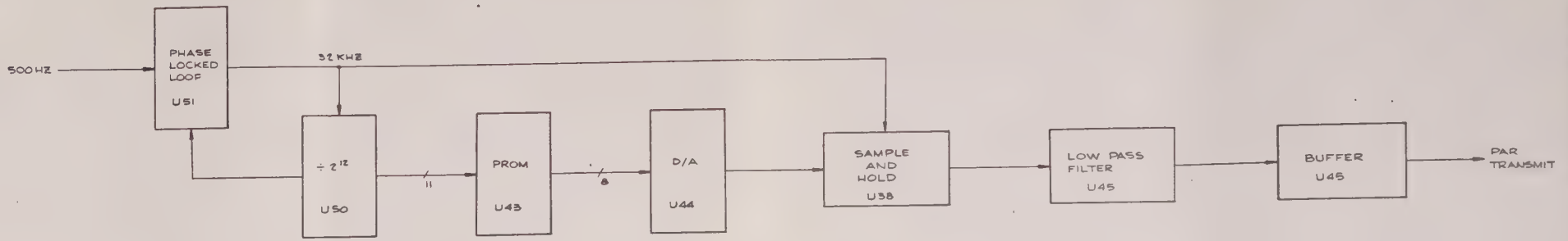

PAR GENERATOR

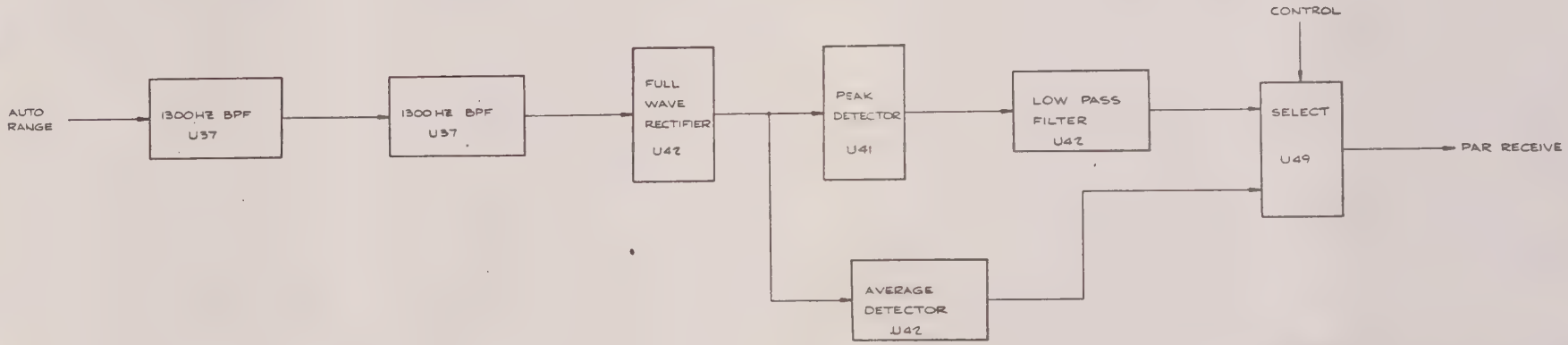

PAR RECEIVER

QTY	QTY	QTY	QTY	ITEM NO.	PART OR IDENTIFYING NO.	DESCRIPTION OR NOMENCLATURE	MATERIAL	SPEC OR NOTE
						LIST OF MATERIAL OR PARTS LIST		

ALL THREADS UNIFIED SERIES EXTERNAL THREADS "B" BE CLASS 2A INTERNAL THREADS "B" BE CLASS 2B AFTER FINISH PLATING OTHERWISE SPECIFIED

% FINISH ON ALL MACHINED SURFACES UNLESS OTHERWISE SPECIFIED. REMOVE ALL BURRS AND SHARP EDGES UNLESS OTHERWISE SPECIFIED

DO NOT SCALE DWG.

DIMENSIONS ARE IN INCHES AND INCLUDE FINISH THICKNESS UNLESS OTHERWISE SPECIFIED

TOLERANCE UNLESS SPECIFIED		
BASIC	TWO PLACE	THREE PLACE
UP TO 6	± .02	±
6 TO 24	± .03	±
ABOVE 24	± .06	±
ANGULAR DIMENSION	±	

FINISH:

Sierra
A DIVISION OF LEAR SIEGLER INC
MENLO PARK, CALIFORNIA 94025

CODE IDENT. NO 54778

809A, A3BD
PAR GENERATOR
PAR RECEIVER

DATE	SIZE	DRAWING NO.	REV.
6-17-81	D	DO3332400	F1

BY NSA LE
CHECKED
APPR
SCALE
STOCK AS
SHEET 10 OF 11

ASSY OR ITEM	QTY NEXT	NEXT ASSY	MODEL NO.
		APPLICATION	

DO3332400 F1

THIS DRAWING AND SPECIFICATIONS SHOWN SHALL NOT BE COPIED OR USED WITHOUT WRITTEN CONSENT OF LEAR SIEGLER, INC., SIERRA ELECTRONIC DIVISION.

REVISIONS			
ZONE	LTR	DESCRIPTION	DATE	APPROVED
		SEE SHT ONE		

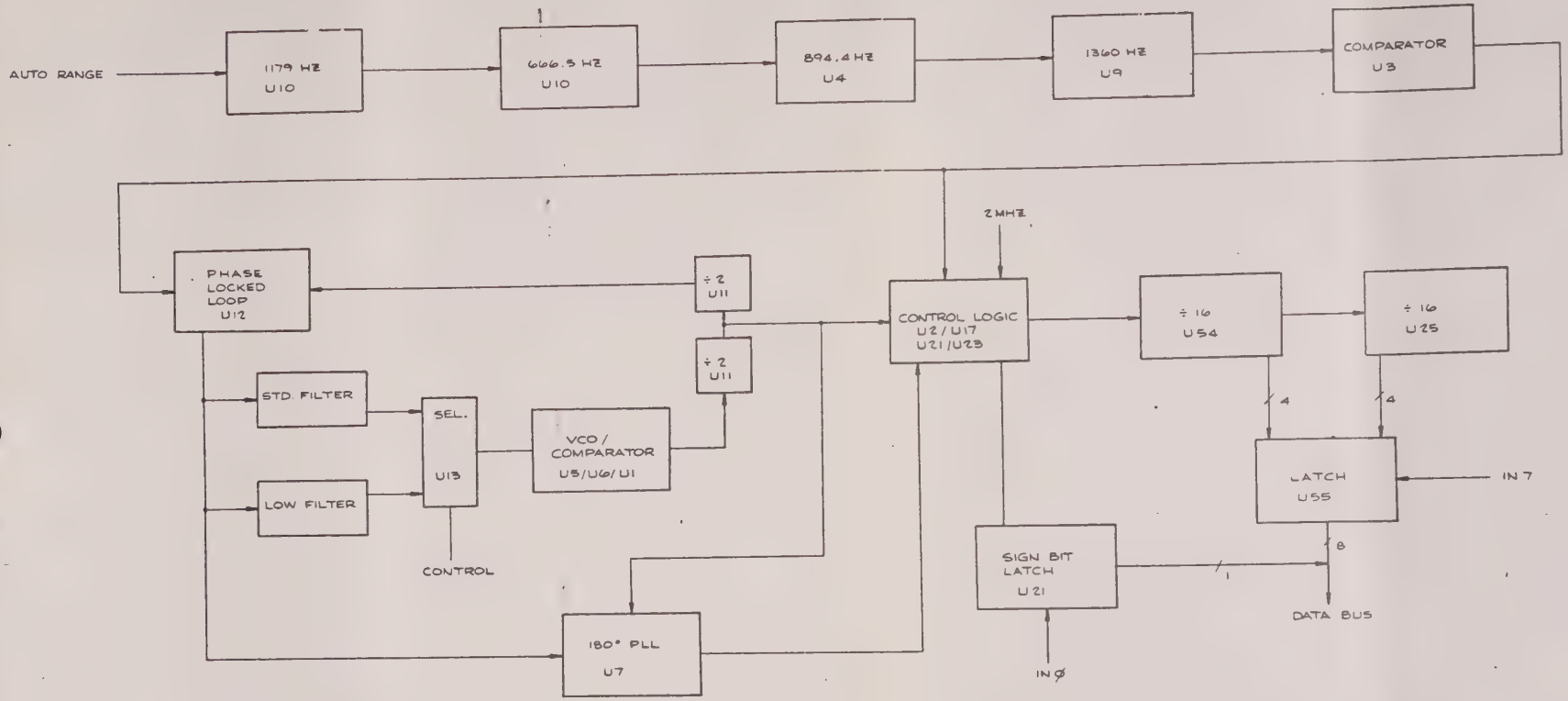

NOTE: UP THROUGH BOARD VERSION B4, THE VCO/COMPARATOR SHOWN ABOVE WAS INCLUDED IN THE PLL I.C..

QTY.	QTY.	QTY.	QTY.	ITEM NO.	PART OR IDENTIFYING NO.	DESCRIPTION OR NOMENCLATURE	MATERIAL	SPEC OR NOTE
						LIST OF MATERIAL OR PARTS LIST		

ALL THREADS UNIFIED SERIES EXTERNAL THREADS TO BE CLASS 2A INTERNAL THREADS TO BE CLASS 2B AFTER FINISH UNLESS OTHERWISE SPECIFIED

V FINISH ON ALL MACHINED SURFACES UNLESS OTHERWISE SPECIFIED
REMOVE ALL BURRS AND SHARP EDGES UNLESS OTHERWISE SPECIFIED

DO NOT SCALE DWG.
DIMENSIONS ARE IN INCHES AND INCLUDE FINISH THICKNESS UNLESS OTHERWISE SPECIFIED

TOLERANCE UNLESS SPECIFIED		
	BASIC	TWO PLACE	THREE PLACE
UP TO 6		± .02	±
6 TO 24		± .03	±
ABOVE 24		± .06	±
ANGULAR DIMENSION		±	

FINISH:

Sierra
a DIVISION OF LEAR SIEGLER INC
MENLO PARK, CALIFORNIA 94025

CODE IDENT. NO. 54778

809A, A3 BD.
PHASE JITTER CIRCUIT

ASSY OR ITEM	QTY NEXT	NEXT ASSY	MODEL NO.
APPLICATION			

DATE	SIZE	DRAWING NO.	REV.
10-18-81	D	DO 3332400	F1
BY NGA LE			
CHECKED			
APPR	SCALE	STOCK AS	SHEET 11 OF 11

DO3332400

REVISIONS

SYM	DESCRIPTION	DATE	APPROVED
A	PILOT RUN RELEASE		
A4	PCO 3036, 3134, 3139, 3151	5/12/80	
B	PILOT RUN RELEASE PER DCO 123	6/3/80	
B1	DCO 124	6/5/80	
B2-4	DCO 143, 203, 260A-E, 299	8/28/80	
C	DCO 203A	1/31/81	
	PRODUCTION RELEASE PER DCO 474	2-26-81	
D	ECO 17700	3/11/81	
E	ECO 17748 (S/N EFF 177 & ON)	6-3-81	
F	ECO 17920 (S/N EFF. 177 & ON)	11-9-81	
F	ADD 809A-R USAGE PER ECO 17924	11-9-81	
F1	ECO 18041 (CHANGE TO 809BR)	2-9-82	
G	ECO 18076	5/5/82	

NEXT ASSY.	QTY	MODEL NO.
03411300	1	809A

Sierra

LEAR SIEGLER, INC.
SIERRA ELECTRONIC DIVISION
MENLO PARK, CALIFORNIA 94025

CODE IDENT. NO. 54778

A3 PWB ASSY L/M

DATE 2-6-81
BY Kim Chan-E
APPV'D

SIZE A | DRAWING NO. A03332000 | REV G

STOCK AS

SHEET 1 OF 3

671-14-1

QTY	QTY	QTY	QTY	ITEM	PART NO.	DESCRIPTION	REF.
			2	26	902720106	CAP. 10 UF, 20% , 20V	C109,116
			7	25	901310103	0.01 , NPO , 1%	C97,113,
				25			114,115,128,135,137.
			1	24	901900102	1000PF, 1% (LARGE SIZE)	C86
			1	23	90190047 1	470 PF , DM	C85
			1	22	901410102	0.001 UF , 10%, AXIAL	C84
			1	21	903100224	0.22 , 2%	C81
			8	20	901300474	0.47	C71,75,
				20			76, 87,88,133,136,145
			4	19	901120103	0.01 , 1%	C69,70,
				19			C82,83
			2	18	902710227	220 UF, 30 V	C67,68
			1	17	901900100	10 PF, DM	C65
			7	16	901411103	0.01 , NPO , 5%	C61,90,
				16			101,102,112,124,139.
			5	15	901330104	0.1 , 10%	C47,53,
				15			54,103,118
			6	14	901120104	0.100 , 1% , MYLAR	C36,37,
				14			50,51,58,59
			1	13	901100105	1.0 UF , 2%	C34
			4	12	901330103	0.01 , 10% CK06 C-78	C33,40,104
			2	11	901320102	0.001 , CER. CK05	C32,39
			1	10	901900331	330 PF , 5% DM	C24
			2	9	901930102	1000 PF , 100V, DM , 2%	C7,C21
			16	8	903100103	0.01 , 2% , 50V	C5,9,10,
				8			18,26-30,90-93,99,100,147.
			1	7	901300222	2200 PF, CER., 200V, 10%	C4
			64	6	901300104	CAP. 0.1UF , 20% , 50V	C2,3,6,8,
				6		C11-17,19,20,22,23,25,31,35,41-46,48,	
				6		49,52,55-57,60,62-64,66,72-74,77,79,	
				6		80,89,94,95,98,105-108,110,111,119-123,	
				6		125,127,134,138,140,143,144,146.	
			1	5	901980391	CAP. 390 PF DM 2%	C1.
				4			
			REF	3	D03332400	PWB A3 SCHEMATIC	
			1	2	904500709	PWB A3 (DO 3332200)	
			REF	1	D03332100	PWB A3 ASSY	

LIST OF MATERIAL

A3 PWB ASSY LIM	Sierra	SIZE A	DRAWING NO. AO 3332000
	CODE IDENT NO. 54778	SCALE	SHEET 2 OF 8

BISHOP GRAPHICS/ACCUPRESS

QTY	QTY	QTY	QTY	ITEM	PART NO.	DESCRIPTION	REF.
			2	59	907302490	RESISTOR 249 Ω, 1/8W, 1%	R50,95
			4	58	907301912	19.1K, 1/8W, 1%	R47,59,63,90
			1	57	907303921	3.92K, 1/8W, 1%	R45
			2	56	907304021	4.02K, 1/8W, 1%	R44,296
			1	55	907302003	200K	R43
			1	54	907302802	28.0K	R41
			1	53	907301372	13.7K	R38
			2	52	907309092	90.9K	R37,62
			2	51	907305232	52.3K	R33,34
			2	50	907302322	23.2K	R31,32
			2	49	907301502	15.0K	R30,75
			1	48	907301823	182K	R27
			1	47	907303011	3.01K	R23
			1	46	907900290	1K POT	R20
			1	45	907309531	9.53K	R19
			4	44	906900101	100 Ω, 5%	R18,24,53,200
			1	43	907301072	10.7K	R16.
			1	42	907302102	21.0K	R14
			1	41	907301822	18.2K	R13
			8	40	907900316	5K POT	R11,12,15,
				40			17,69,87,105,106,135
			36	39	907301002	RESISTOR 10.0K	R4,5,9,
				39			10,21,22,25,26,28,29,35,36,39,40,42,
				39			48,49,51,52,46,88,91,92,93,94,126,164,
				39			171,172,174,177,178,270,271,274,277.
			2	38	906900302	RES. 3K, 5%	R3,R8
			2	37	906900273	RES. 27K, 5%	R2,R6
			4	36	906900512	RESISTOR 5.1K, 5%	R1,7,66,67
				35			
				34			
				33			
				32			
				31			
			2	30	901320472	CAP 0.0047	C141,142
			4	29	902740107	100UF	C129-132
			1	28	901900821	820PF, DM, 5%	C126
			1	27	902710225	CAP. 2.2UF, 20V, 10%	C117

LIST OF MATERIAL

A3 PWB ASSY L/M

Sierra

CODE IDENT NO. 54778

SIZE A

DRAWING NO. AO 3332000

SCALE

SHEET 3 OF 8

BISHOP GRAPHICS/ACCUPRESS REORDER NO. A-0180

QTY	QTY	QTY	QTY	ITEM	PART NO.	DESCRIPTION	REF.
			3	90	907900281	RESISTOR 10K POT	R111,114,115
			1	89	907304222	4.22K	R110
			3	88	907307682	76.8K, 1%	R109,141,142
			16	87	907301003	100K, 1%	R108,138
				87		139,143,148,149,160,183,230,232,239,	
				87		248,260,269,278,288.	
			3	86	907900338	50K POT	R107,255
				86			R294
			1	85	906900100	10Ω, 5%	R104
			1	34	907303650	365Ω	R103
			1	83	907302370	237Ω, 1/8W, 1%	R102
			1	82	907304020	402Ω, 1/8W, 1%	R101
			1	81	906900102	1K, 1/4W, 5%	R100
			1	80	906900333	33K, 1/4W, 5%	R99
			2	79	907302051	2.05K	R96,97
			2	78	906904701	4.7K	R86,224
			1	77	907306341	6.34K	R84
			1	76	907305762	57.6K	R83
			1	75	907301913	191K	R82
			1	74	907309093	909K	R81
			2	73	907308252	82.5K, 1/8W, 1%	R77,80
			5	72	907301001	1.00K, 1/8W, 1%	R74,76,
				72		78,79, 295	
			1	71	907304123	412K, 1/8W, 1%	R73
			1	70	907303833	383K, 1/8W, 1%	R72
			1	69	907900331	20K POT	R71
			2	68	907301652	16.5K, 1/8W, 1%	R70,89
			7	67	907900288	2K POT	R68,154,
				67		155,238,245,291,292	
			3	66	906900104	100K, 1/4W, 5%	R65,85,
				66			,185
			2	65	907307321	7.32K, 1/8W, 1%	R61,64
			1	64	907301503	150K, 1/8W, 1%	R60
			1	63	906900153	15K, 1/4W, 5%	R58
			1	62	906900565	5.6MΩ, 1/4W, 5%	R57
			3	61	907302002	20.0K, 1/8W, 1%	R56,173,175
			1	60	907302673	RESISTOR 267K, 1/8W, 1%	R54

LIST OF MATERIAL

A3 PWB ASSY L/M

Sierra

CODE IDENT NO. 54778

SIZE A

DRAWING NO. AO 3332000

SCALE

SHEET 4 OF 8

BISHOP GRAPHICS/ACCUPRESS REORDER NO. A-0480

QTY	QTY	QTY	QTY	ITEM	PART NO.	DESCRIPTION	REF.
			1	122	907301270	RESISTOR 127 Ω, 1/8W, 1%	R234
			1	121	907304990	499 Ω, 1%	R231
			1	120	907309091	9.09K	R228
			1	119	907301622	16.2K	R227
			1	118	907900279	100K POT	R226
			1	117	906900472	4.7K, 5%	R224
			1	116	907306343	634K, 1/8W, 1%	R222
			1	115	907302873	287K, 1/8W, 1%	R221
			1	114	907302672	26.7K, 1/8W, 1%	R219
			2	113	907304642	46.4K, 1/8W, 1%	R196,225
			1	112	907302263	226K, 1/8W, 1%	R182
			1	111	906900475	4.7MΩ, 1/4W, 5%	R180
			5	110	906900103	10K, 5%	R98,179,181,
				110			257,258,
			1	109	906900122	1.2K, 1/4W, 5%	R176
			2	108	907302101	2.10K	R152,233
			1	107	907303162	31.6K, 1%	R146
			12	106	907305492	54.9K, 1/8W, 1%	R144,145,
				106			229,242,249,250,262,263,284-287
			1	105	907302261	2.26K, 1/8W, 1%	R140
			2	104	907305490	549Ω, 1/8W, 1%	R137,147
			1	103	907303012	30.1K, 1/8W, 1%	R136
			5	102	906900105	1MΩ, 1/4W, 5%	R134,256
				102			273,279,281
			5	101	907303742	37.4K, 1/8W, 1%	R133,150,
				101			151,246,290
			1	100	907302262	22.6K, 1/8W, 1%	R132
			2	99	907302000	200Ω, 1/8W, 1%	R127,131
			2	98	907302432	24.3K	R124,129
			6	97	907301212	12.1K	R121-123,
				97			125,128,130
			1	96	907301471	1.47K	R120
			1	95	907309310	931Ω	R119
			1	94	907305900	590Ω	R118
			1	93	907302321	2.32K	R117
			1	92	907303651	3.65K, 1/8W, 1%	R116
			3	91	907302612	RESISTOR 26.1K, 1%	R112,113,153

LIST OF MATERIAL

A3 PWB ASSY L/M

Sierra

CODE IDENT NO. 54778

SIZE A

DRAWING NO. AO 3332000

SCALE

SHEET 5 OF 8

BISHOP GRAPHICS/ACCUPRESS

QTY	QTY	QTY	QTY	ITEM	PART NO.	DESCRIPTION	REF.
			2	157	920204046	I.C. 4046	U7,U12
			16	156	920210084	TL084	U6,9,10,
				156			18,27,37,39,40,45,46,
				156			47,52,53,58.59,64
			1	155	920303080	CA 3080	U5
			4	154	920210082	TL082	U4,8,26,41
			1	153	920300339	LM339	U2
			2	152	920300311	I.C. LM311	U1,U3
				151			
				150			
				149			
			1	148	907301102	RESISTOR 11.0K, 1%	R276
			1	147	907301242	RES. 12.4K, 1%	R55
			1	146	907303241	RES. 3.24K, 1%	R299
			1	145	907301100	RESISTOR 110Ω, 1/8W, 1%	R305
			1	144	906900394	390K, 1/4W, 5%	R304
			1	143	906900106	10MΩ, 1/4W, 5%	R303
			1	142	906900395	3.9MΩ, 1/4W, 5%	R301
			4	141	907304991	4.99K	R297,298,300,302
			1	140	907306811	6.81K	R283
			1	139	907302430	243Ω, 1/8W, 1%	R282
			1	138	907308061	8.06K	R280
			1	137	907304992	49.9K, 1%	R275
			1	136	907308451	8.45K	R263
			1	135	907301070	107Ω	R264
			2	134	907308660	866Ω, 1/8W, 1%	R261,268
			2	133	907303652	36.5K, 1/8W, 1%	R259,267
			1	132	907307151	7.15K, 1/8W, 1%	R254
			1	131	907301500	150Ω, 1%	R253
			2	130	907301131	1.13K, 1/8W, 1%	R247,289
			3	129	907307501	7.50K, 1/8W, 1%	R244,266,293
			1	128	907301300	130Ω, 1/8W, 1%	R243
			1	127	907308251	8.25K	R241
			1	126	907301741	1.74K	R240
			1	125	907302872	28.7K, 1%	R237
			1	124	907306981	6.98K, 1%	R236
			3	123	907306191	RESISTOR 6.19K, 1/8W, 1%	R235,251,252

LIST OF MATERIAL

A3 PWB ASSY L/M

Sierra

CODE IDENT NO. 54778

SIZE A

DRAWING NO. A03332000

SCALE

SHEET 6 OF 8

BISHOP GRAPHICS/ACCUPRESS

QTY	QTY	QTY	QTY	ITEM	PART NO.	DESCRIPTION	REF.
				193			
			1	192	910500069	DIODE HP 2900	CR19
			4	191	910504001	DIODE IN 4001	CR10-CR13
			14	190	910504148	DIODE IN 4148	CR1-CR9,
				190			CR14-CR18
				189			
				188			
				187			
				186			
				185			
				184			
			1	183	920207541	I.C. 7541 KN	U63
			1	182	920204028	4028	U62
			1	181	920204046	4046	U51
			1	180	920204040	4040	U50
			3	179	920204053	4053	U49,57,60
			3	178	920274374	74C374	U48,55,61
			1	177	920217541	7541 JN	U44
				176			
			1	175	920210074	TL074CN	U42
			1	174	920300398	398	U38
			1	173	920204051	4051	U36
			1	172	920300386	LM386N-1	U35
			2	171	920274373	74C373	U32,34
			2	170	920204520	4520	U31,33
			1	169	920204013	4013	U30
			1	168	920204001	4001	U29
			1	167	920300319	LM319	U28
			2	166	920314193	74LS193	R25,54
			2	165	920207400	74C00	U22,24
			2	164	920300532	AD532	U19,20
			1	163	920204030	4030	U17
			1	162	920208095	80C95	U16
			1	161	920207402	74C02	U15
			1	160	920274906	74C906	U14
			1	159	920204052	4052	U13
			4	158	920207474	I.C. 74C74	U11,21,23,56

LIST OF MATERIAL

A3 PWB ASSY L/M

Sierra

CODE IDENT NO. 54778

SIZE A

DRAWING NO. AO 3332000

SCALE

SHEET 7 OF 8

BISHOP GRAPHICS/ACCUPRESS
REORDER NO. A-0480

QTY	QTY	QTY	QTY	ITEM	PART NO.	DESCRIPTION	REF.
			8	201	9151001 78	#6 X 25 SWAGE STANDOFF	
			1	200	914200103	24 PIN SOCKET, LOW PROFILE	
				199			
				198			
				197			
			1	196	914800353	CONNECTOR, 3 PIN MOLEX, LOCKING RAMP	J2
			1	195	914800338	CONNECTOR, 50 PIN	J1
			1	194	910303904	TRANSISTOR 2N3904	Q1

LIST OF MATERIAL

A3 PWB ASSY L/M

Sierra

CODE IDENT NO. 54778

SIZE A

DRAWING NO. A0 3332000

SCALE

SHEET 8 OF 8

BISHOP GRAPHICS/ACCUPRESS
REORDER NO. A-0480

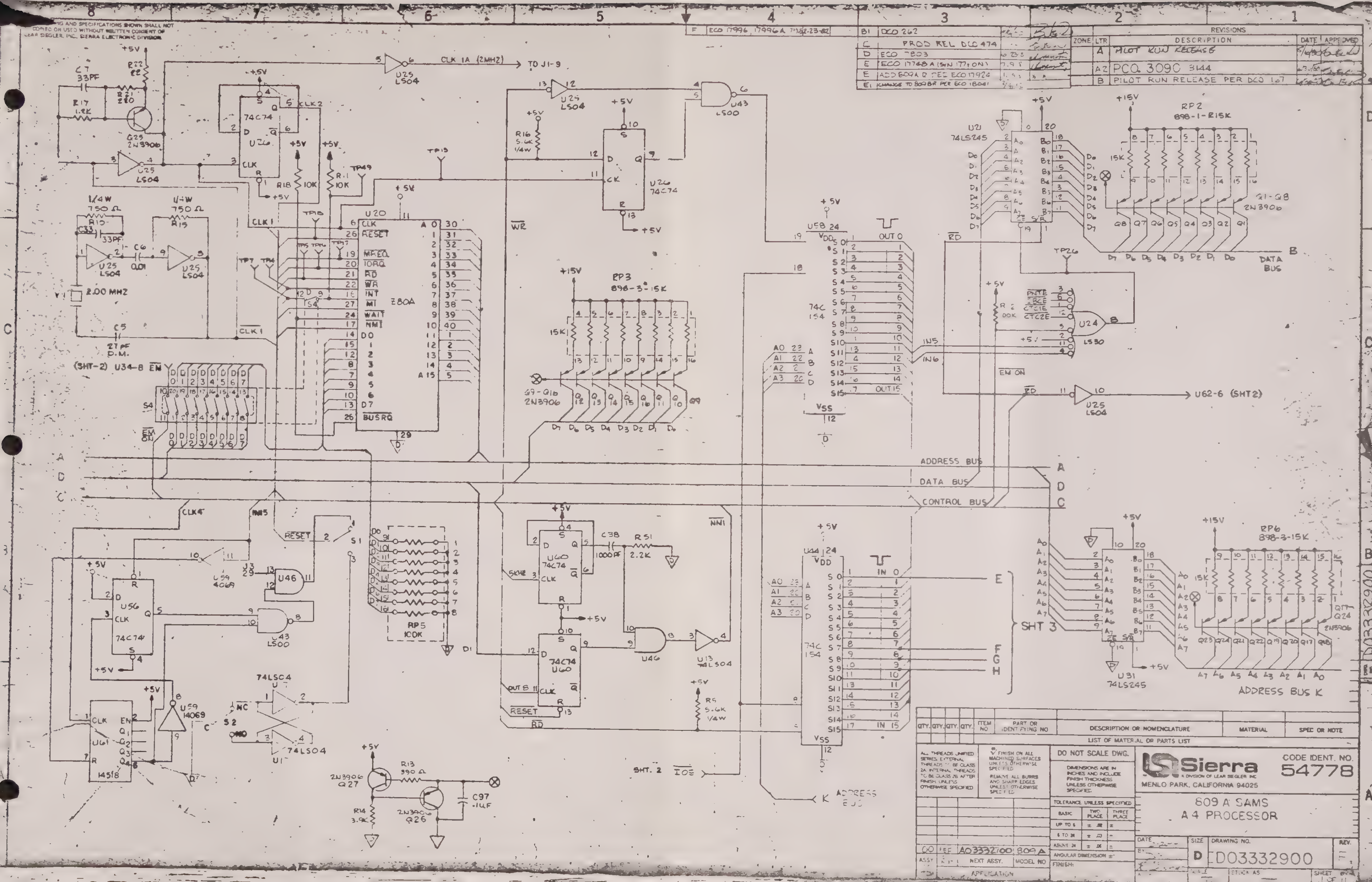

REVISIONS
B1 DCO 262
C PROD REL DCO 474
D ECO 7803
E ECO 17748 A (S/N 177 ON)
E ADD 609A R PER ECO 17924
E1 CHANGE TO 809BR PER ECO 18041
A PILOT RUN RELEASE
A2 PCO 3090 3144
B PILOT RUN RELEASE PER DCO 107
CLK 1A (2MHZ)
TO J1-9
U20 Z80A
U25 LS04
U26 74C74
U43 LS00
U21 74LS245
RP2 898-1-R15K
Q1-Q8 2N3906
DATA BUS
RP3 898-3-15K
Q9-Q16 2N3906
U58 74C154
U24 LS30
U62-6 (SHT2)
(SHT-2) U34-8 EN
2.00 MHZ
ADDRESS BUS
DATA BUS
CONTROL BUS
RESET
S1
U46
U56 74C74
U43 LS00
RP5 10K
U60 74C74
U13 74LS04
U44 74C154
SHT 3
U31 74LS245
RP6 898-3-15K
Q17-Q24 2N3906
ADDRESS BUS K
U61 14518
U59 14069
74LSC4
SHT. 2 IOE
ADDRESS BUS
Q27 2N3906
Q26 2N3906
C97 .1UF
QTY. QTY. QTY. QTY. ITEM NO PART OR IDENTIFYING NO DESCRIPTION OR NOMENCLATURE MATERIAL SPEC OR NOTE
LIST OF MATERIAL OR PARTS LIST
DO NOT SCALE DWG.
Sierra
A DIVISION OF LEAR SIEGLER INC
MENLO PARK, CALIFORNIA 94025
CODE IDENT. NO. 54778
809 A SAMS
A 4 PROCESSOR
SIZE D
DRAWING NO. D03332900
A03332700 809A
NEXT ASSY. MODEL NO
APPLICATION

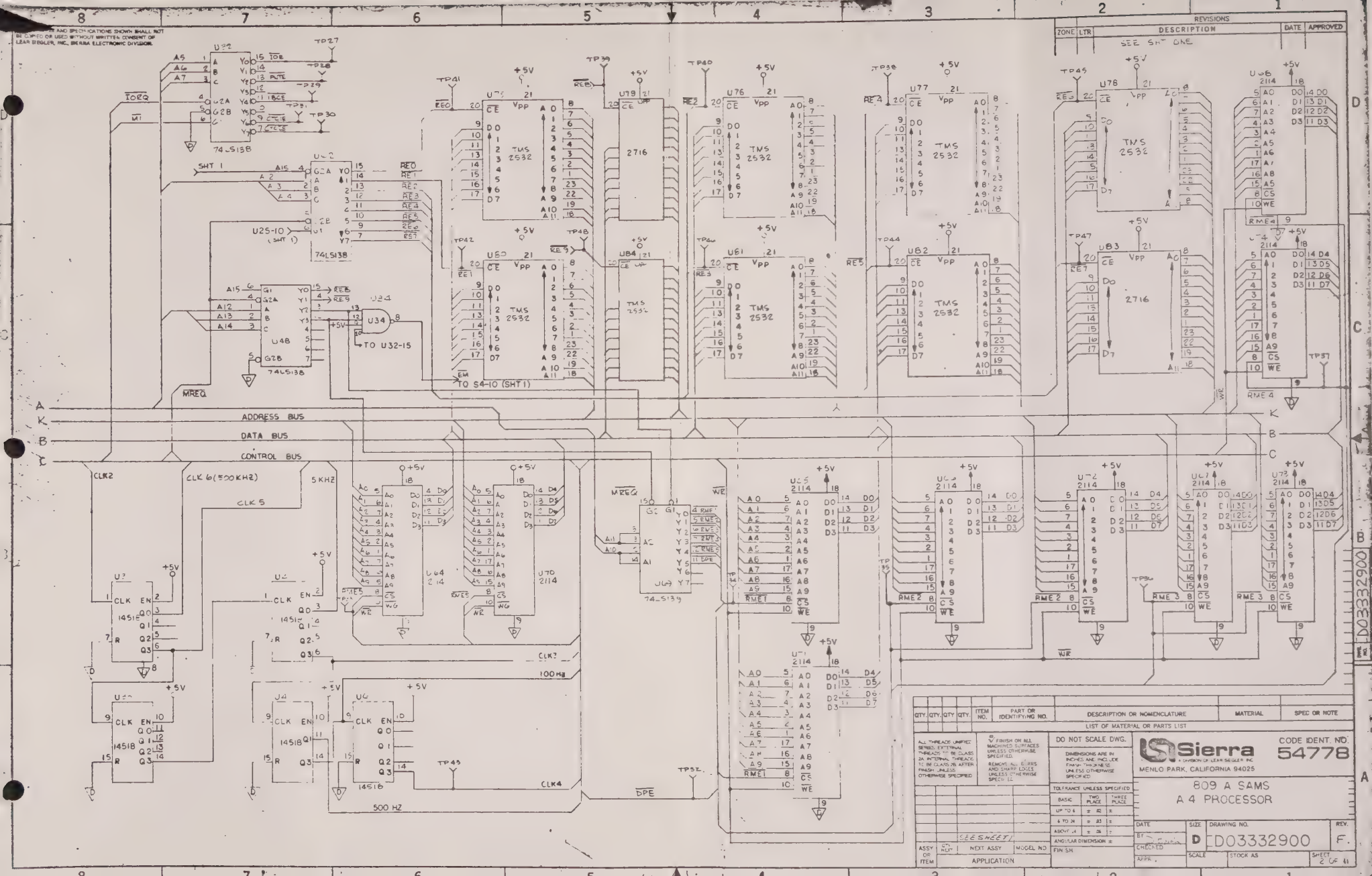

REVISIONS
ZONE LTR DESCRIPTION DATE APPROVED
SEE SHT ONE
ADDRESS BUS
DATA BUS
CONTROL BUS
CLK 6(500KHZ)
5KHZ
CLK 5
100Hz
500 HZ
TO S4-10 (SHT 1)
TO U32-15
74LS138
74LS139
TMS 2532
2716
2114
14518
14516
QTY. QTY. QTY. QTY. ITEM NO. PART OR IDENTIFYING NO. DESCRIPTION OR NOMENCLATURE MATERIAL SPEC OR NOTE
LIST OF MATERIAL OR PARTS LIST
DO NOT SCALE DWG.
Sierra
A DIVISION OF LEAR SIEGLER INC
MENLO PARK, CALIFORNIA 94025
CODE IDENT. NO. 54778
809 A SAMS
A 4 PROCESSOR
DATE
SIZE D
DRAWING NO. D03332900
REV. F.
SCALE
STOCK AS
SHEET 2 OF 41
APPLICATION
NEXT ASSY
MODEL NO
SEE SHEET 1
D03332900

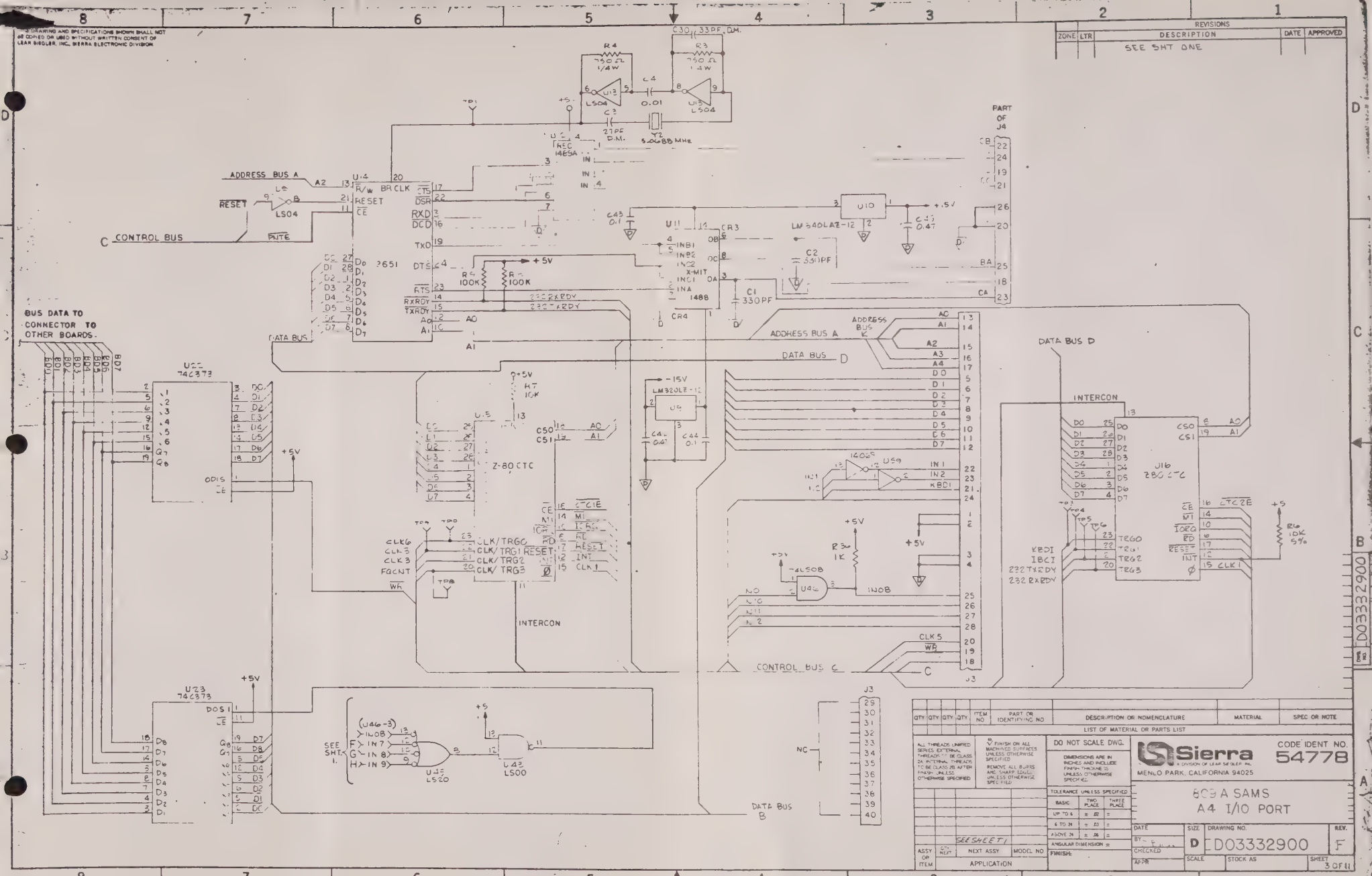

THIS DRAWING AND SPECIFICATIONS SHOWN SHALL NOT BE COPIED OR USED WITHOUT WRITTEN CONSENT OF LEAR SIEGLER, INC., SIERRA ELECTRONIC DIVISION
REVISIONS
ZONE LTR DESCRIPTION DATE APPROVED
SEE SHT ONE
ADDRESS BUS A
RESET
CONTROL BUS
BUS DATA TO CONNECTOR TO OTHER BOARDS
DATA BUS
DATA BUS D
DATA BUS B
PART OF J4
INTERCON
Z-80 CTC
LM340LAZ-12
LM320LZ-12
74C373
74LS08
74LS00
LS04
LS20
Y2 5.0688 MHz
C30 33PF, DM.
C1 330PF
C2 330PF
C3 27PF D.M.
C4 0.01
R4 750 Ω 1/4W
R3 750 Ω 1/4W
R6 10K 5%
R7 10K
R9 100K
R8 100K
R36 1K
U14 2651
U22 74C373
U23 74C373
U15 Z-80 CTC
U16 Z80 CTC
U10
U11 1488
U9
U46
U45 LS20
U43 LS00
U13 LS04
U12 REC 1485A
J3
J4
CONTROL BUS C
DATA BUS B
SEE SHT. 1.
DO NOT SCALE DWG.
ALL THREADS UNIFIED SERIES EXTERNAL THREADS TO BE CLASS 2A INTERNAL THREADS TO BE CLASS 2B AFTER FINISH UNLESS OTHERWISE SPECIFIED
FINISH ON ALL MACHINED SURFACES UNLESS OTHERWISE SPECIFIED
REMOVE ALL BURRS AND SHARP EDGES UNLESS OTHERWISE SPECIFIED
TOLERANCE UNLESS SPECIFIED
BASIC TWO PLACE THREE PLACE
UP TO 6 ± .02 ±
6 TO 24 ± .03 ±
ABOVE 24 ± .06 ±
ANGULAR DIMENSION ±
FINISH:
SEE SHEET 1
ASSY OR ITEM
QTY NEXT
NEXT ASSY
MODEL NO
APPLICATION
QTY QTY QTY QTY ITEM NO PART OR IDENTIFYING NO DESCRIPTION OR NOMENCLATURE MATERIAL SPEC OR NOTE
LIST OF MATERIAL OR PARTS LIST
Sierra
A DIVISION OF LEAR SIEGLER, INC.
MENLO PARK, CALIFORNIA 94025
CODE IDENT NO. 54778
809 A SAMS
A4 I/O PORT
DATE
BY
CHECKED
APPR
SIZE D
DRAWING NO. D03332900
REV. F
SCALE
STOCK AS
SHEET 3 OF 11
D03332900

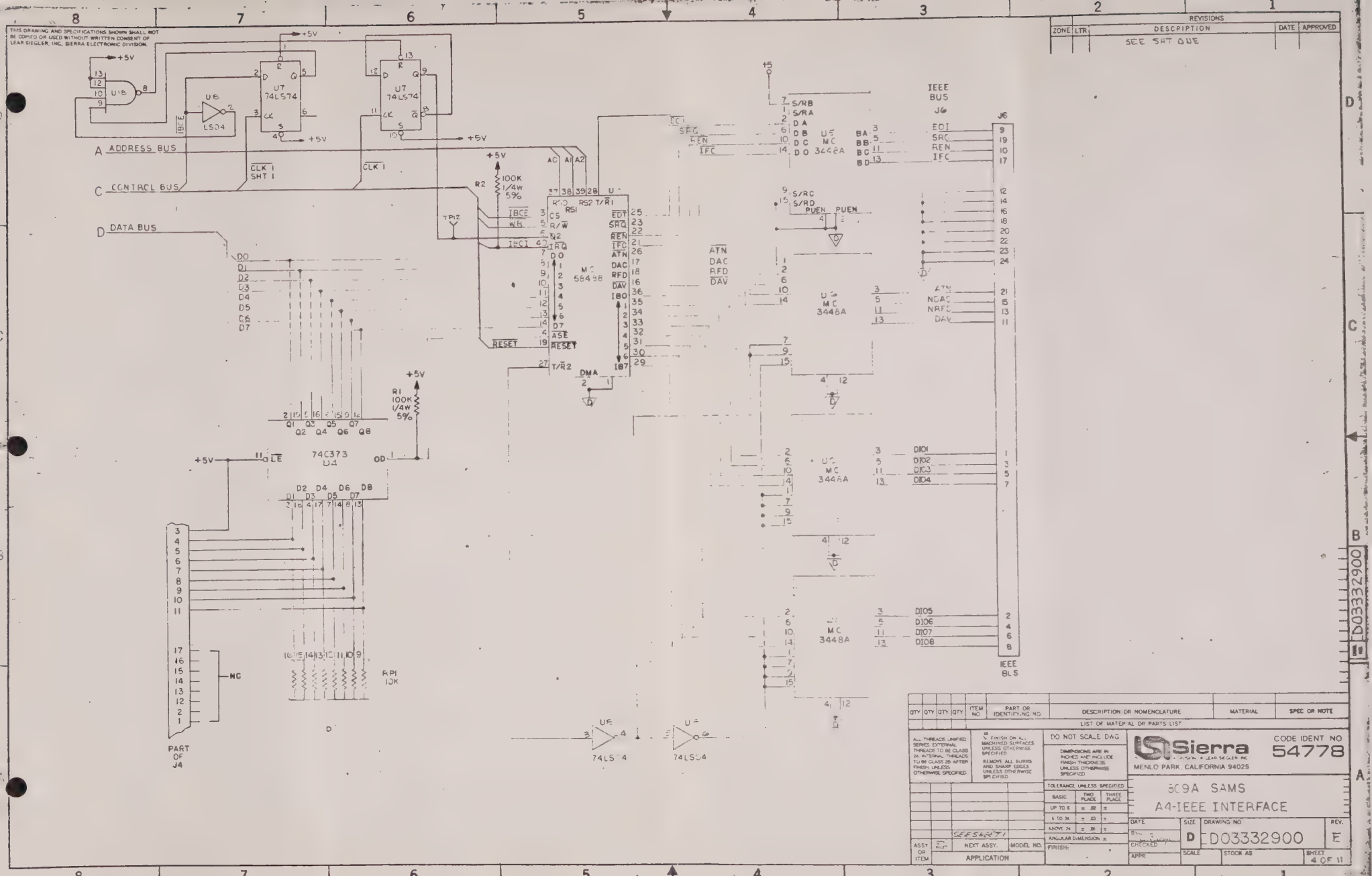

THIS DRAWING AND SPECIFICATIONS SHOWN SHALL NOT BE COPIED OR USED WITHOUT WRITTEN CONSENT OF LEAR SIEGLER, INC., SIERRA ELECTRONIC DIVISION.
REVISIONS
ZONE LTR DESCRIPTION DATE APPROVED
SEE SHT ONE
A ADDRESS BUS
C CONTROL BUS
D DATA BUS
U7 74LS74
U8 LS04
U18
CLK 1 SHT 1
R2 100K 1/4W 5%
R1 100K 1/4W 5%
TP12
MC 68488
RS1
RS2
DMA
RESET
ATN DAC RFD DAV
U5 MC 3448A
U6 MC 3448A
U7 MC 3448A
U8 MC 3448A
IEEE BUS J6
EOI SRQ REN IFC
ATN NDAC NRFD DAV
DIO1 DIO2 DIO3 DIO4 DIO5 DIO6 DIO7 DIO8
IEEE BUS
74C373 U4
RP1 10K
PART OF J4
NC
74LS04
74LS04
QTY QTY QTY QTY ITEM NO PART OR IDENTIFYING NO DESCRIPTION OR NOMENCLATURE MATERIAL SPEC OR NOTE
LIST OF MATERIAL OR PARTS LIST
ALL THREADS UNIFIED SERIES EXTERNAL THREADS TO BE CLASS 2A INTERNAL THREADS TO BE CLASS 2B AFTER FINISH UNLESS OTHERWISE SPECIFIED
FINISH ON ALL MACHINED SURFACES UNLESS OTHERWISE SPECIFIED
REMOVE ALL BURRS AND SHARP EDGES UNLESS OTHERWISE SPECIFIED
DO NOT SCALE DWG
DIMENSIONS ARE IN INCHES AND INCLUDE FINISH THICKNESS UNLESS OTHERWISE SPECIFIED
TOLERANCE UNLESS SPECIFIED
BASIC TWO PLACE THREE PLACE
UP TO 6 ± .02 ±
6 TO 24 ± .03 ±
ABOVE 24 ± .06 ±
ANGULAR DIMENSION ±
FINISH:
Sierra
MENLO PARK, CALIFORNIA 94025
CODE IDENT NO 54778
809A SAMS
A4-IEEE INTERFACE
DATE
SIZE D
DRAWING NO D03332900
REV. E
CHECKED
APPR
SCALE
STOCK AS
SHEET 4 OF 11
SEE SHT 1
ASSY OR ITEM
NEXT ASSY.
MODEL NO.
APPLICATION
D03332900

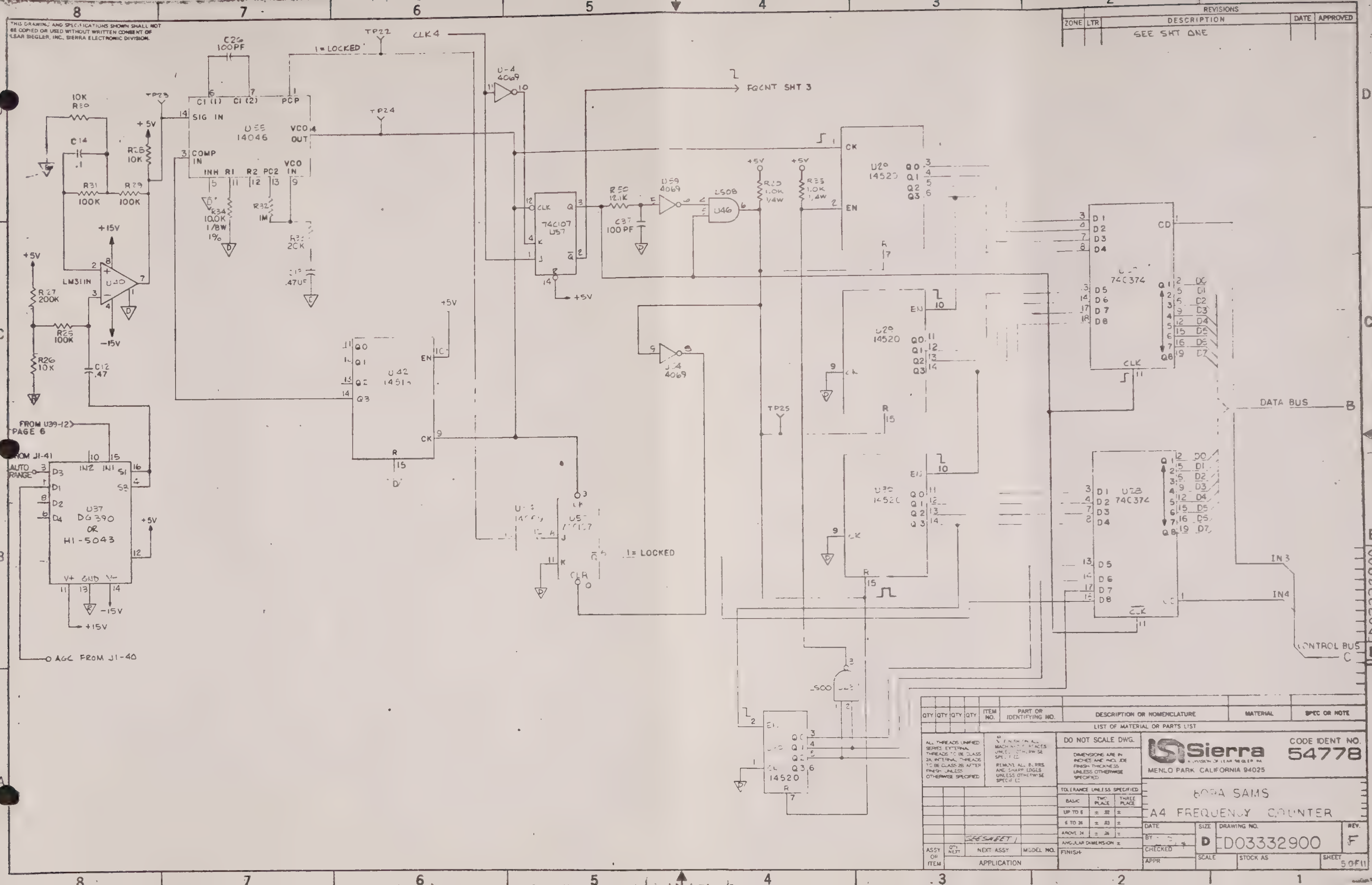

THIS DRAWING AND SPECIFICATIONS SHOWN SHALL NOT BE COPIED OR USED WITHOUT WRITTEN CONSENT OF LEAR SIEGLER, INC. SIERRA ELECTRONIC DIVISION
REVISIONS
ZONE LTR DESCRIPTION DATE APPROVED
SEE SHT ONE
TP22
CLK4
1 = LOCKED
C26 100PF
TP23
TP24
SIG IN
U55 14046
VCO OUT
COMP IN
INH R1 R2 PC2 VCO IN
PCP
U-4 4069
FRONT SHT 3
R34 100K 1/8W 1%
R32 1M
LM311N
U40
+15V
-15V
+5V
R27 200K
R25 100K
R26 10K
C12 .47
C14 .1
R31 100K
R29 100K
R28 10K
74C107 U57
R50 12.1K
C37 100 PF
U59 4069
U46
U20 14520
U28 74C374
DATA BUS
U42 14516
U37 DG390 OR HI-5043
FROM U39-12 PAGE 6
FROM J1-41
AUTO RANGE
AGC FROM J1-40
TP25
U24 4069
1 = LOCKED
IN3
IN4
CONTROL BUS
14520
LIST OF MATERIAL OR PARTS LIST
DO NOT SCALE DWG.
Sierra
MENLO PARK CALIFORNIA 94025
CODE IDENT NO. 54778
6084 SAMS
A4 FREQUENCY COUNTER
D
D03332900
F
SHEET 5 OF 11

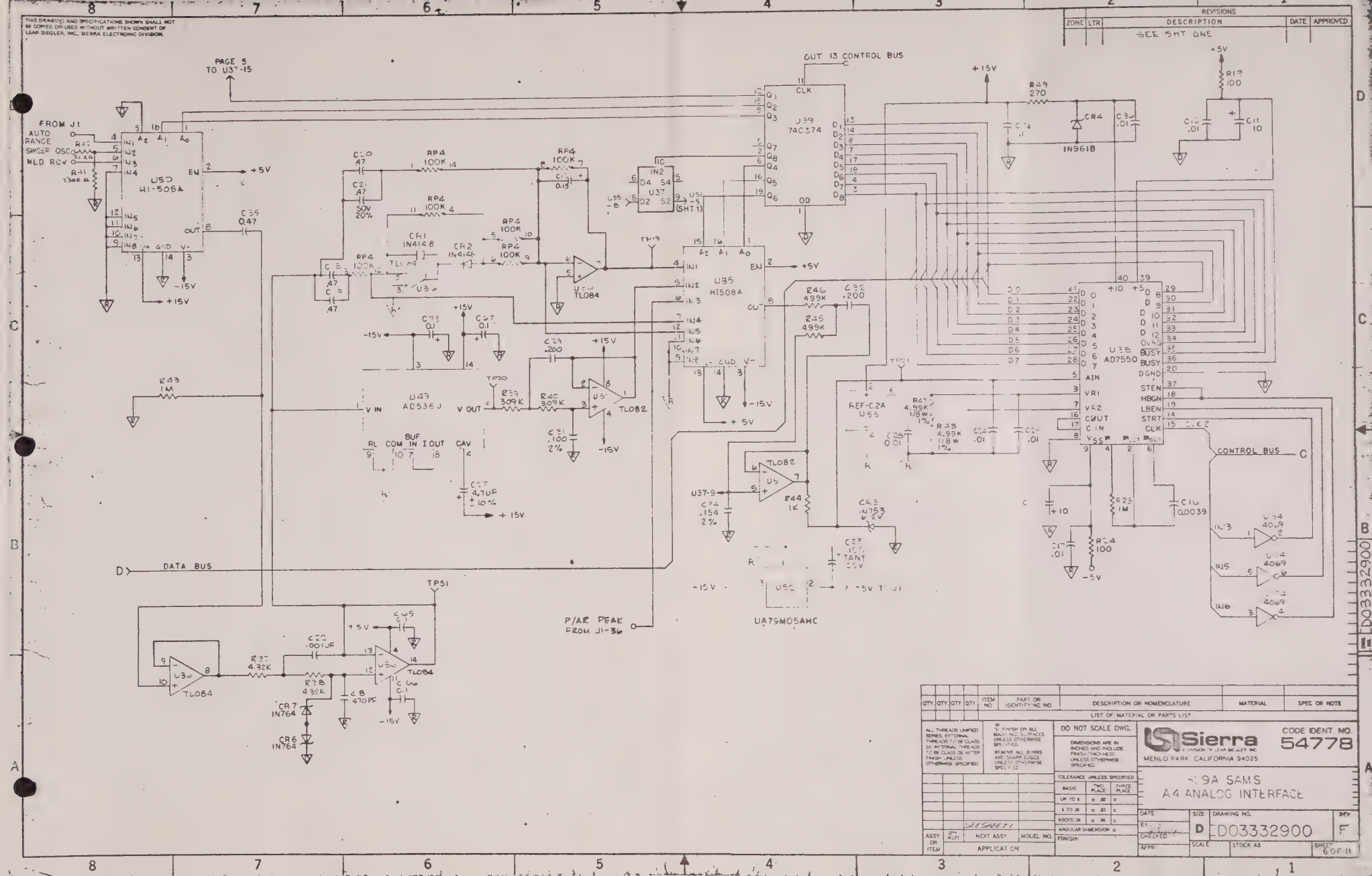
THIS DRAWING AND SPECIFICATIONS SHOWN SHALL NOT BE COPIED OR USED WITHOUT WRITTEN CONSENT OF LEAR SIEGLER, INC., SIERRA ELECTRONIC DIVISION.
REVISIONS
ZONE LTR DESCRIPTION DATE APPROVED
SEE SHT ONE
PAGE 5 TO U37-15
FROM J1
AUTO RANGE
SWEEP OSC
NLD RCV
U50 HI-508A
OUT 13 CONTROL BUS
U39 74C374
U35 HI508A
U49 AD536J
U38 AD7550
U37
U51 (SHT 1)
U52 UA79M05AHC
REF-C2A U53
CONTROL BUS
DATA BUS
P/AR PEAK FROM J1-36
TL084
TL082
IN961B
IN753
IN4148
CR1 IN4148
CR2 IN4148
CR7 IN764
CR6 IN764
TP19
TP20
TP51
TP21
+5V
-5V
+15V
-15V
+10
R43 1M
R46 499K
R45 499K
R44 1K
R49 270
R19 100
R23 1M
R24 100
R37 4.32K
R38 4.32K
R39 309K
R40 309K
R47 4.99K 1/8W 1%
R48 4.99K 1/8W 1%
C35 0.47
C16 0.0039
C8 470PF
C22 .001UF
C27 4.7UF ±10%
C31 .100 2%
C32 .200
C29 .200
C34 .154 2%
C23 100 TANT 25V
C10 .01
C11 10
C24 .01
C25 .01
C17 .01
C28 0.01
C33 .01
C74 .1
C65 .1
C66 .1
C73 0.1
C67 0.1
C20 .47
C21 .47 50V 20%
C18 .47
C19 .47
RP4 100K
U36 TL084
U37-9
U51 -5 (SHT 1)
U35 -8
U36 TL084
U36 TL084
U37 TL082
U5 TL082
U54 4069
U54 4069
U54 4069
IN3
IN5
IN6
D03332900
QTY QTY QTY QTY ITEM NO PART OR IDENTIFYING NO DESCRIPTION OR NOMENCLATURE MATERIAL SPEC OR NOTE
LIST OF MATERIAL OR PARTS LIST
ALL THREADS UNIFIED SERIES EXTERNAL THREADS TO BE CLASS 2A INTERNAL THREADS TO BE CLASS 3B AFTER FINISH UNLESS OTHERWISE SPECIFIED
FINISH ON ALL MACHINED SURFACES UNLESS OTHERWISE SPECIFIED
REMOVE ALL BURRS AND SHARP EDGES UNLESS OTHERWISE SPECIFIED
DO NOT SCALE DWG.
DIMENSIONS ARE IN INCHES AND INCLUDE FINISH THICKNESS UNLESS OTHERWISE SPECIFIED
TOLERANCE UNLESS SPECIFIED
BASIC TWO PLACE THREE PLACE
UP TO 6 ± .02 ±
6 TO 24 ± .03 ±
ABOVE 24 ± .06 ±
ANGULAR DIMENSION ±
FINISH
Sierra
A DIVISION OF LEAR SIEGLER INC
MENLO PARK CALIFORNIA 94025
CODE IDENT. NO. 54778
A4 ANALOG INTERFACE
DATE
SIZE D
DRAWING NO. D03332900
REV F
SCALE
STOCK AS
SHEET 6 OF 11
SEE SHEET 1
ASSY OR ITEM
QTY NEXT
NEXT ASSY
MODEL NO.
APPLICATION

THIS DRAWING AND SPECIFICATIONS SHOWN SHALL NOT BE COPIED OR USED WITHOUT WRITTEN CONSENT OF LEAR SIEGLER, INC., SIERRA ELECTRONIC DIVISION.

REVISIONS				
ZONE	LTR	DESCRIPTION	DATE	APPROVED
		SEE SHT ONE		

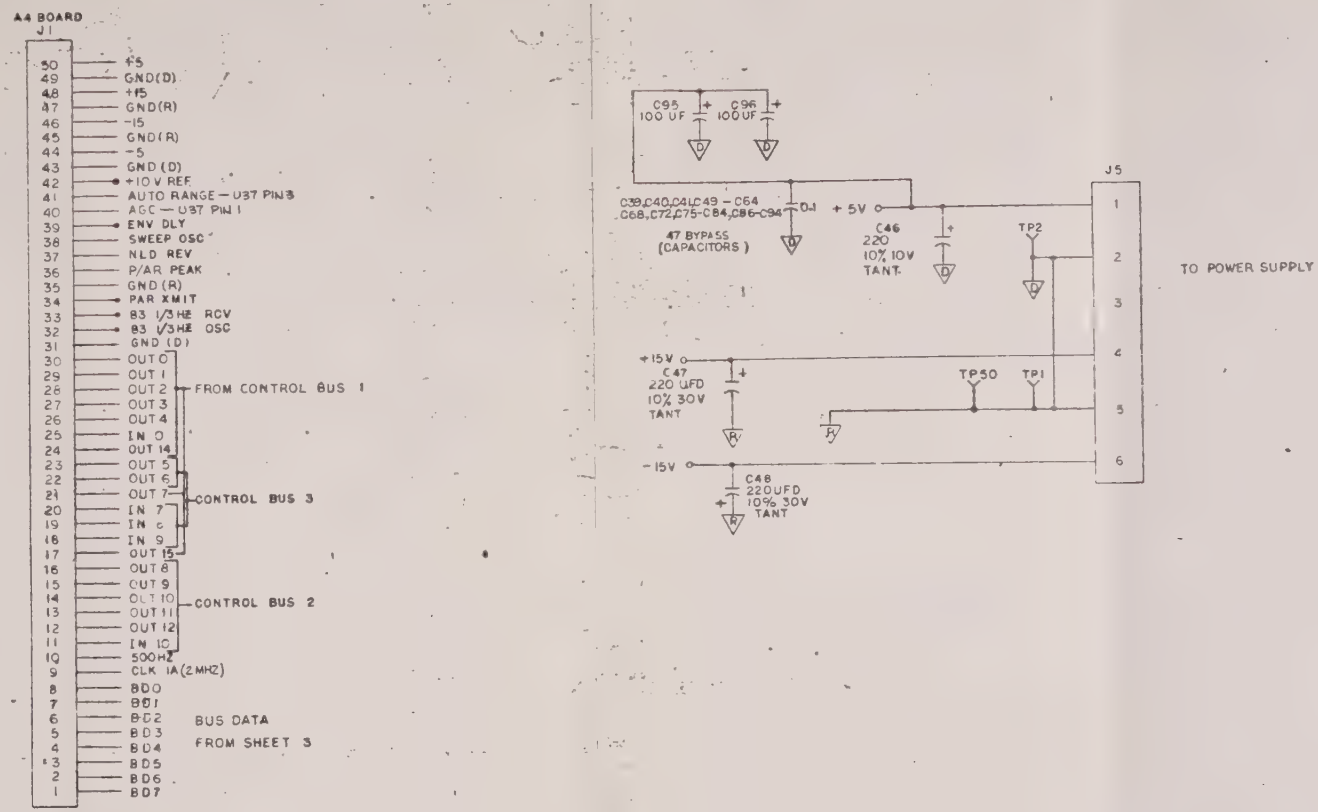

1. ALL CAPACITORS ARE IN MICROFARADS UNLESS OTHERWIS MARKED.
2. ALL RESISTORS ARE 1/4W 5% UNLESS OTHERWISE MARKED.
3. ON CONNECTOR J1 —● DENOTES FUNCTION NOT USED ON THIS BOARD.

QTY.	QTY.	QTY.	QTY.	ITEM NO	PART OR IDENTIFYING NO.	DESCRIPTION OR NOMENCLATURE	MATERIAL	SPEC OR NOTE

LIST OF MATERIAL OR PARTS LIST

ALL THREADS UNIFIED SERIES. EXTERNAL THREADS TO BE CLASS 2A; INTERNAL THREADS TO BE CLASS 2B, AFTER PLATING, UNLESS OTHERWISE SPECIFIED

V FINISH ON ALL MACHINED SURFACES UNLESS OTHERWISE SPECIFIED. REMOVE ALL BURRS AND SHARP EDGES UNLESS OTHERWISE SPECIFIED.

DO NOT SCALE DWG.

DIMENSIONS ARE IN INCHES AND INCLUDE PLATING THICKNESS UNLESS OTHERWISE SPECIFIED.

TOLERANCE UNLESS SPECIFIED

BASIC	TWO PLACE	THREE PLACE
UP TO 6	± .02	±
6 TO 14	± .03	±
ABOVE 14	± .03	±
ANGULAR DIMENSION ±		

Sierra — CODE IDENT. NO. 54778

LEAR SIEGLER, INC
SIERRA ELECTRONIC DIVISION
MENLO PARK, CALIFORNIA 94025

809A SAMS
A 4 CONNECTORS

DATE	SIZE	DRAWING NO.	REV
	D	D03332900	—

SEE SHEET 1

ASSY OR ITEM	QTY NEXT	NEXT ASSY	MODEL NO.
		APPLICATION	

D03332900

THIS DRAWING AND SPECIFICATIONS SHOWN SHALL NOT BE COPIED OR USED WITHOUT WRITTEN CONSENT OF LEAR SIEGLER, INC., SIERRA ELECTRONIC DIVISION

ZONE	LTR	DESCRIPTION	DATE	APPROVED
		SEE SHT ONE		

INTERGRATED CIRCUIT SUMMARY DATA		DIGITAL GND	+5V	+15V	REF GND	-15V
IC REF DESIGNATION	DEVICE TYPE					
U18, U45, U34	74LS20	–	14			
U7	74LS74	7	14			
U57	74C107	7	14			
U4, U22, U23	74C373	10	20			
U27, U28, U39	74C374	10	20			
U32, U48, U62	74LS138	8	16			
U46	74LS08	7	14			
U40	LM311N	1		8		4
U43	74LS00	7	14			
U6, U13, U17, U25	74LS04	7	14			
U5	TL032			8		4
U35, U50	HI-508A		2	3	14	3
U24	74LS30	7	14			
U26, U56, U60	74C74	7	14			
U24, U59	14069	7	14			
U69	74LS139	8	16			
U29, U30	14520	8	16			
U44, U58	74C154	12	24			
U11	1488	7				
U12	1489A	7	14			
U21, U31	74LS245	10	20			
U55	14046	8	16			
U33, U42, U47, U61	14518	8	16			
U64, U65, U66, U67, U68 U70, U71, U72, U73, U74	2114	9	18			
U49	AD536J			14	10	3
U53	REF-02A			2	4	
U38	AD7550	20			8	
U75, U76, U77, U78, U79, U80, U81, U82, U83, U84	TMS 2532	12	24			
U9	LM320LZ-12	3				2
U10	LM340LAZ-12	2		1		
U52	UA79MC5AHC				1	3
U3	6848B	1	20			
U1, U2, U5, U6	3448A	8	16			
U20	Z-80A	29	11			
U15, U16	Z-80CTC	5	24			
U36	TL084			4		11
U14	2651	4	26			
U37	IH5043		12	11	13	14

REFERENCE DESIGNATION DATA	
LAST USED	NOT USED
R52	
U96	
Q27	
Y2	
CR8	
J6	J2
S4	S3
RP6	
U84	U19, U41, U63

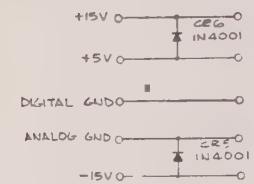

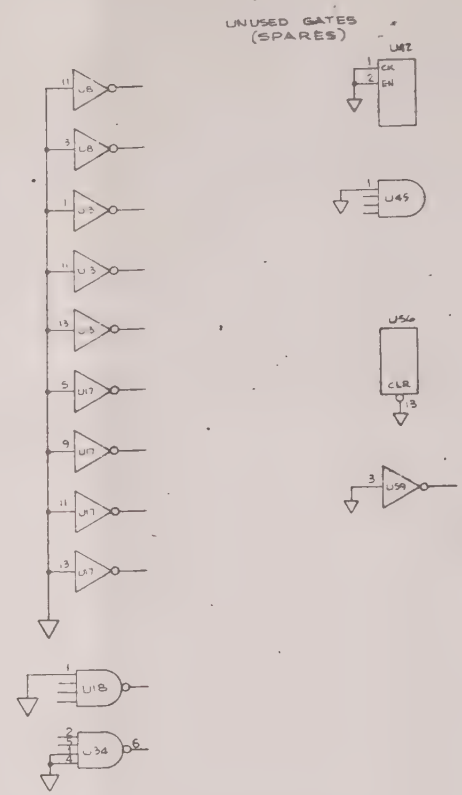

QTY	QTY	QTY	QTY	ITEM NO	PART OR IDENTIFYING NO	DESCRIPTION OR NOMENCLATURE	MATERIAL	SPEC OR NOTE

LIST OF MATERIAL OR PARTS LIST

ALL THREADS UNIFIED SERIES, EXTERNAL THREADS TO BE CLASS 2A, INTERNAL THREADS TO BE CLASS 2B AFTER FINISH UNLESS OTHERWISE SPECIFIED

FINISH ON ALL MACHINED SURFACES UNLESS OTHERWISE SPECIFIED

REMOVE ALL BURRS AND SHARP EDGES UNLESS OTHERWISE SPECIFIED

DO NOT SCALE DWG

DIMENSIONS ARE IN INCHES AND INCLUDE FINISH THICKNESS UNLESS OTHERWISE SPECIFIED

TOLERANCE UNLESS SPECIFIED

BASIC	TWO PLACE	THREE PLACE
UP TO 6		
6 TO 24		
ABOVE 24		

SEE SHEET

ASSY | NEXT ASSY

Sierra
A DIVISION OF LEAR SIEGLER INC.
MENLO PARK, CALIFORNIA 94025

CODE IDENT. NO. 54778

809A SAMS
A4

DATE

SIZE D | DRAWING NO. D03332900 | REV E

SCALE | STOCK AS | SHEET 5 OF 11

D03332900

THIS DRAWING AND SPECIFICATIONS SHOWN SHALL NOT BE COPIED OR USED WITHOUT WRITTEN CONSENT OF KLEAR SIEGLER, INC. SIERRA ELECTRONIC DIVISION

REVISIONS			
ZONE	LTR	DESCRIPTION	DATE	APPROVED
		SEE SHT ONE		

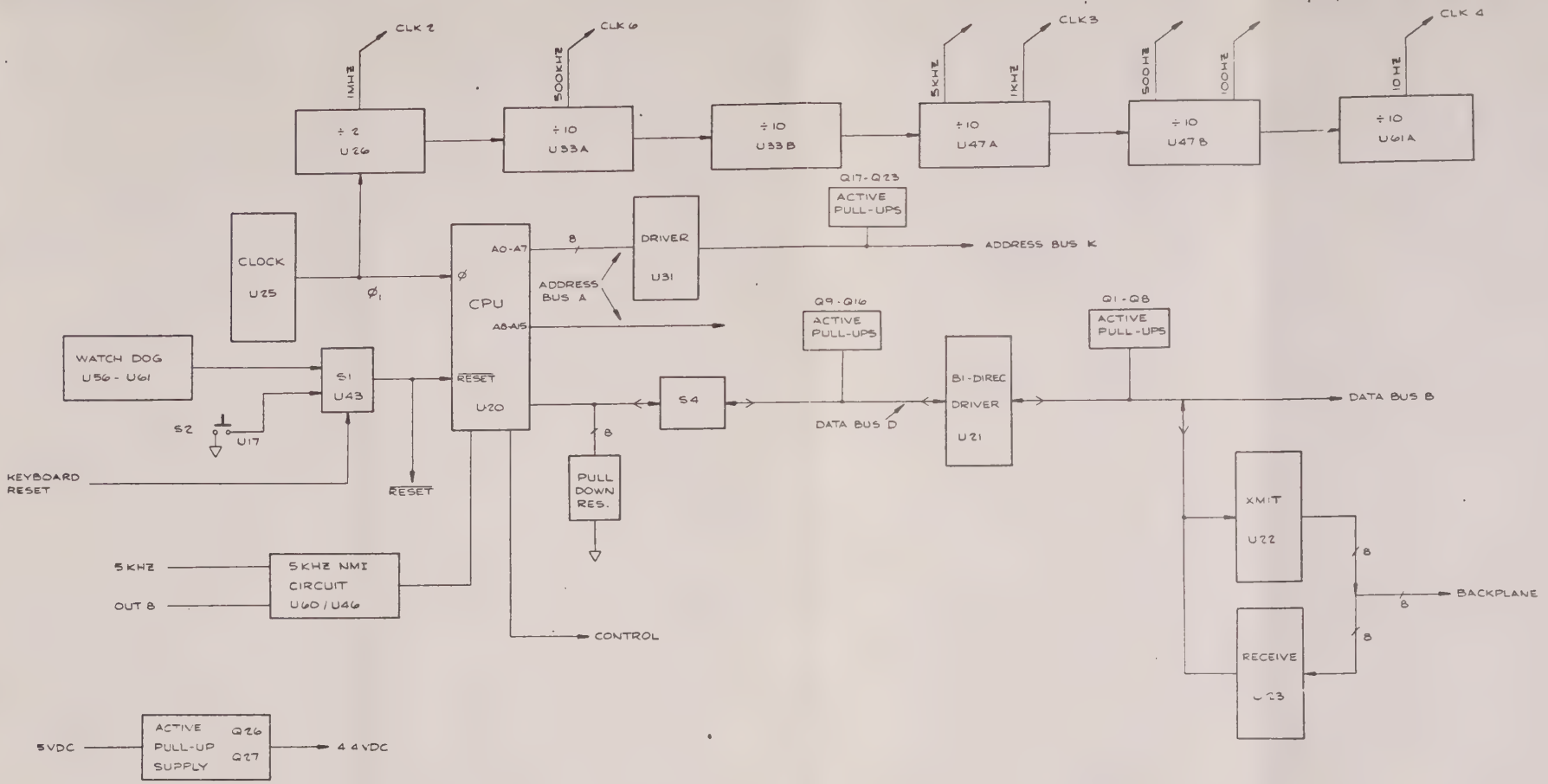

QTY	QTY	QTY	QTY	ITEM NO.	PART OR IDENTIFYING NO.	DESCRIPTION OR NOMENCLATURE	MATERIAL	SPEC OR NOTE
						LIST OF MATERIAL OR PARTS LIST		

ALL THREADS UNIFIED SERIES EXTERNAL THREADS 2C BE CLASS 2A INTERNAL THREADS 2C BE CLASS 2B AFTER FINISH UNLESS OTHERWISE SPECIFIED

63 FINISH ON ALL MACHINED SURFACES UNLESS OTHERWISE SPECIFIED
REMOVE ALL BURRS AND SHARP EDGES UNLESS OTHERWISE SPECIFIED

DO NOT SCALE DWG
DIMENSIONS ARE IN INCHES AND INCLUDE FINISH THICKNESS UNLESS OTHERWISE SPECIFIED

TOLERANCE UNLESS SPECIFIED		
BASIC	TWO PLACE	THREE PLACE
UP TO 6	± .02	±
6 TO 24	± .03	±
ABOVE 24	± .06	±
ANGULAR DIMENSION	±	

FINISH:

Sierra
A DIVISION OF KLEAR SIEGLER INC
MENLO PARK CALIFORNIA 94025

CODE IDENT NO 54778

809A, A4
CONTROL CIRCUITS

DATE	SIZE	DRAWING NO.	REV.
6-8-81	D	DO3332900	F

BY NGA LE
CHECKED
APPR
SCALE
STOCK AS
SHEET 9 OF 11

SHEET 1
ASSY OR ITEM | QTY NEXT | NEXT ASSY. | MODEL NO.
APPLICATION

DO3332900

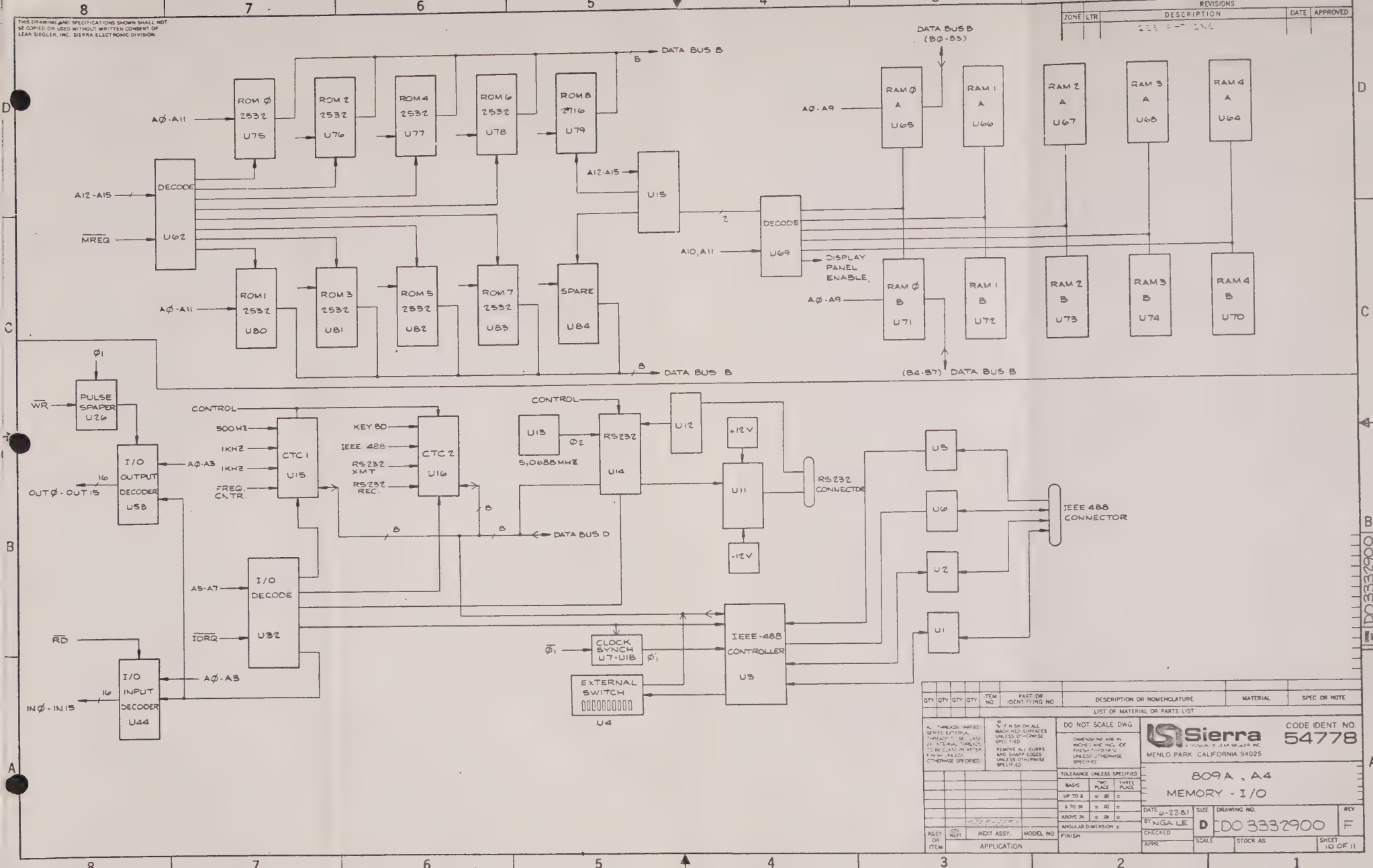
THIS DRAWING AND SPECIFICATIONS SHOWN SHALL NOT BE COPIED OR USED WITHOUT WRITTEN CONSENT OF LEAR SIEGLER, INC. SIERRA ELECTRONIC DIVISION.
REVISIONS
ZONE LTR DESCRIPTION DATE APPROVED
DATA BUS B
DATA BUS B (B0-B3)
ROM 0 2532 U75
ROM 2 2532 U76
ROM 4 2532 U77
ROM 6 2532 U78
ROM 8 2716 U79
A0-A11
A12-A15
DECODE U62
MREQ
U15
DECODE U69
A10, A11
DISPLAY PANEL ENABLE
ROM 1 2532 U80
ROM 3 2532 U81
ROM 5 2532 U82
ROM 7 2532 U83
SPARE U84
RAM 0 A U65
RAM 1 A U66
RAM 2 A U67
RAM 3 A U68
RAM 4 A U64
RAM 0 B U71
RAM 1 B U72
RAM 2 B U73
RAM 3 B U74
RAM 4 B U70
A0-A9
(B4-B7) DATA BUS B
PULSE SPAPER U26
WR
I/O OUTPUT DECODER U58
OUT0-OUT15
A0-A3
CONTROL
500HZ
1KHZ
1KHZ
FREQ. CNTR.
CTC 1 U15
KEY BD
IEEE 488
RS232 XMT
RS232 REC.
CTC 2 U16
DATA BUS D
U13
5,0688MHZ
RS232 U14
U12
+12V
U11
-12V
RS232 CONNECTOR
U5
U6
U2
U1
IEEE 488 CONNECTOR
A5-A7
I/O DECODE U32
IORQ
RD
I/O INPUT DECODER U44
IN0-IN15
CLOCK SYNCH U7-U1B
EXTERNAL SWITCH U4
IEEE-488 CONTROLLER U3
QTY QTY QTY QTY ITEM NO PART OR IDENTIFYING NO DESCRIPTION OR NOMENCLATURE MATERIAL SPEC OR NOTE
LIST OF MATERIAL OR PARTS LIST
DO NOT SCALE DWG
Sierra
MENLO PARK CALIFORNIA 94025
CODE IDENT NO. 54778
809A, A4
MEMORY - I/O
DATE 6-22-81
BY NGA LE
CHECKED
APPR
SIZE D
DRAWING NO. DO 3332900
REV F
SCALE
STOCK AS
SHEET 10 OF 11
ASSY OR ITEM
QTY NEXT
NEXT ASSY.
MODEL NO
APPLICATION
TOLERANCE UNLESS SPECIFIED
BASIC
TWO PLACE
THREE PLACE
UP TO 6
6 TO 24
ABOVE 24
ANGULAR DIMENSION
FINISH
DO3332900

THIS DRAWING AND SPECIFICATIONS SHOWN SHALL NOT BE COPIED OR USED WITHOUT WRITTEN CONSENT OF LEAR SIEGLER, INC., SIERRA ELECTRONIC DIVISION

REVISIONS				
ZONE	LTR	DESCRIPTION	DATE	APPROVED
		SEE SHT ONE		

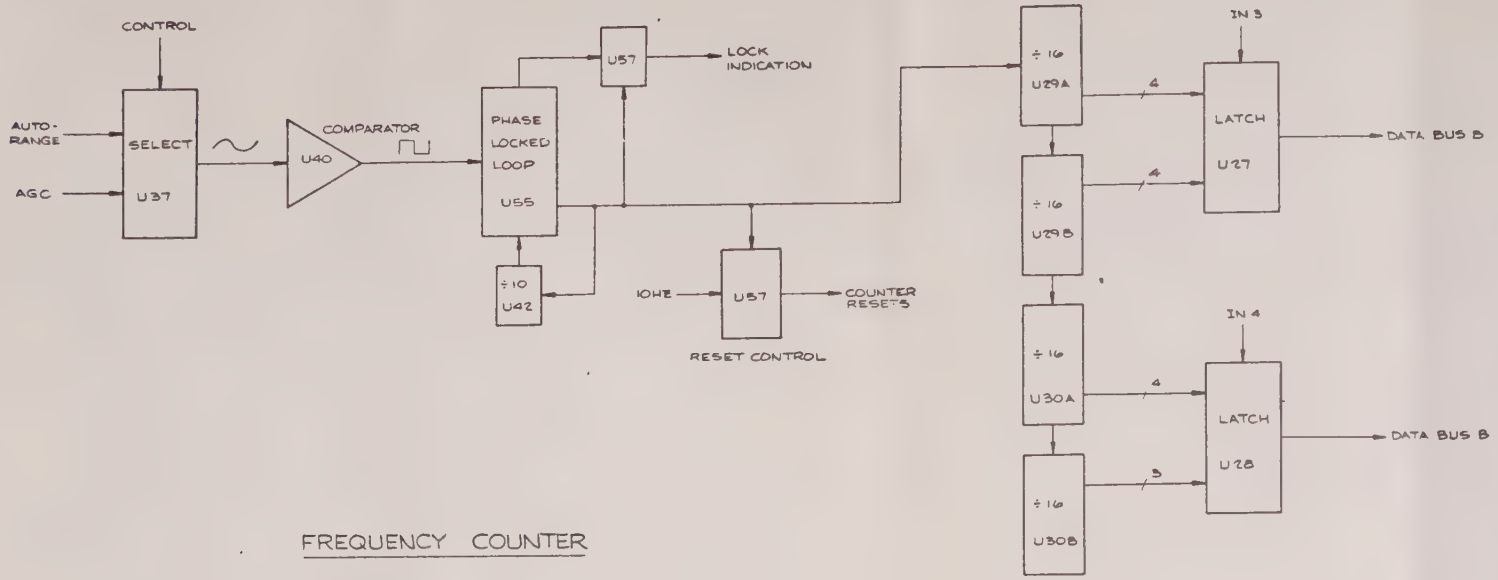

FREQUENCY COUNTER

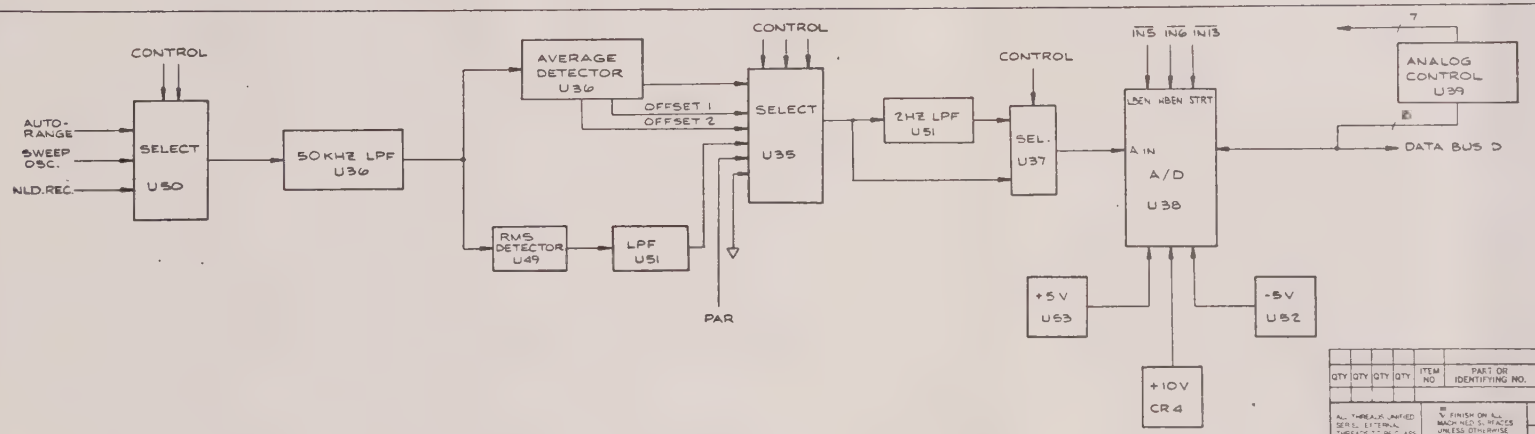

A/D CIRCUITS

QTY	QTY	QTY	QTY	ITEM NO	PART OR IDENTIFYING NO.	DESCRIPTION OR NOMENCLATURE	MATERIAL	SPEC OR NOTE

LIST OF MATERIAL OR PARTS LIST

ALL THREADS UNIFIED SERIES, EXTERNAL THREADS TO BE CLASS 2A, INTERNAL THREADS TO BE CLASS 2B AFTER FINISH, UNLESS OTHERWISE SPECIFIED

125 FINISH ON ALL MACHINED SURFACES UNLESS OTHERWISE SPECIFIED

REMOVE ALL BURRS AND SHARP EDGES UNLESS OTHERWISE SPECIFIED

DO NOT SCALE DWG

DIMENSIONS ARE IN INCHES ARE INCLUDE FINISH, TOLERANCES UNLESS OTHERWISE SPECIFIED

TOLERANCE UNLESS SPECIFIED		
BASIC	TWO PLACE	THREE PLACE
UP TO 6	± .02	±
6 TO IN	± .03	±
ABOVE IN	± .06	±
ANGULAR DIMENSION	±	

FINISH

Sierra
A DIVISION OF LEAR SIEGLER INC
MENLO PARK CALIFORNIA 94025

CODE IDENT. NO 54778

809A, A4
FREQUENCY COUNTER
A/D CIRCUITS

DATE	SIZE	DRAWING NO	REV.
10-22-8	D	DO 3332900	F

BY NGA LE
CHECKED
APPR
SCALE
STOCK AS
SHEET 11 OF 11

ASSY OR ITEM | USED ON NEXT ASSY | MODEL NO
APPLICATION

DO 3332900

REVISIONS

SYM	DESCRIPTION	DATE	APPROVED
A	PILOT RUN RELEASE		
A8	PCO 3029, 3074, 3080, 3106, 3115, 3135, 3127, 3141, 3152	5/12/80	[signature]
B	PILOT RUN RELEASE PER DCO 123	6/3/80	[signature]
B4	DCO 146, 182, 212, 219	8/29/80	[signature]
B5	DCO 382	1-14-81	[signature]
C	DCO 387, 393	1-14-81	[signature]
	PRODUCTION RELEASE PER DCO 474	2-25-81	[signature]
D	ECO 17802 (S/N EFF. 177 & ON)	6-12-81	[signature]
D	ADD 809A-R PER ECO 17924 (TYPE 1)	11-9-81	[signature]
D1	REMOVE 809A-R PER ECO 17982	3-5-82	

QTY		
E03335100	1	809A
NEXT ASSY.	QTY	MODEL NO.

Sierra

LEAR SIEGLER, INC.
SIERRA ELECTRONIC DIVISION
MENLO PARK, CALIFORNIA 94025

CODE IDENT. NO. 54778

A2 PWB ASSY P/L

DATE	SIZE	DRAWING NO.	REV
7/31/79	A	A03331500	D1
BY [signature]			
APPV'D	STOCK AS	SHEET 1 OF 7	

671-14-1

QTY	QTY	QTY	QTY	ITEM	PART NO.	DESCRIPTION	REF.
			1	28	907900279	RESISTOR, 100K POT	R36
			1	27	906900473	47K, 1/4W, 5%	R35
			1	26	907301623	162K, 1/8W, 1%	R34
			2	25	907301503	150 K, 1/8 W, 1%	R32, R60
			7	24	906900105	1M, 1/4W, 5%	R8, R67,
				24		R77, R78, R79, R80, R122	
			1	23	907302740	274 Ω	R23
			1	22	907307501	7.50K	R22
			1	21	907357R60	57.6Ω	R20
			2	20	907301501	1.50K, 1/8W, 1%	R19, R74
			1	19	907306651	6.65K, 1/8W, 1%	R17
			3	18	907900316	5K POT, 10%, 15T	R16, R101
				18			R109
			3	17	907301331	1.33K, 1/8W, 1%	R5, R18,
				17			R25
			1	16	907900315	500Ω POT, 10%, 15T	R14
			13	15	907309093	909K, 1/8W, 1%	R30
				15		R31, R33, R61, R89, R90,	R91, R92
				15		R93, R94, R95, R96, R156	
			1	14	907900331	20K POT, 10%, 15T 1/2W	R11
				13	907304753	475K 1/8W, 1%	R12
			11	12	907301003	100K, 1/8W, 1%	R97,
				12		R98, R103, R105, R106,	R111, R112
				12		R113, R115, R116, R142	
			1	10	908302004	2M, 1/4W, 1%	R7
			1	9	907304020	402K, 1/8W, 1%.	R5
			4	8	907303012	30.1K, 1/8W, 1%	R3, R4
				8			R27, R28
			3	7	907301002	10K, 1/8W, 1%	R2, R24
				7			R64
			13	6	907302002	RESISTOR, 20K, 1/8W, 1%	R1, R6, R10
				6		R11, R162, R164, R165, R120, R121, R21, R56,	R57, R119
			1	5	907306813	681K, 1%, 1/8W	R13
			1	4	906900104	100K, 5%, 1/4W	R29
				3			
				2	904500703	A2 PWB (D03331700)	
			REF	1	D03331600	A2 PWB ASSY	

LIST OF MATERIAL

A2 PWB ASSY P/L

LSI Sierra

CODE IDENT NO. 54778

SIZE A

DRAWING NO. A03331500

SCALE

SHEET 2 OF 7

BISHOP GRAPHICS/ACCUPRESS
REORDER NO. A-0480

QTY	QTY	QTY	QTY	ITEM	PART NO.	DESCRIPTION	REF.
			1	88	901400182	CAPACITOR, 1800PF, 5%, 100V, NPO	C34
			3	87	903160104	.1 UF, 5%, PARYLENE	C29, C30
				87			C31
			1	86	901411103	.01 UF, 5%, 100V, NPO	C28
			1	85	901900820	82 PF, 500V, DIP MICA	C24
			1	84	901900100	10PF, DIP MICA	C23
			1	83	901900390	39 PF, 50V, DIP MICA	C22
			5	82	902740107	100UF, 10%, 20V, TANT	C21, C75,
				82		C76, C77, C78	
			8	81	903100103	.01 UF, 2%, 50V, POLYCARB	C7, C8
				81		C9, C10, C14, C15, C36, C39	
			18	80	901300474	.47 UF, 20%, 50V, CER	C5,
				80		C6, C11, C16, C17, C27, C41,	C42, C43,
				80		C96, C97, C44-C46, C58, C66,	C72
			31	79	901300104	CAPACITOR, .1 UF, 20%, 50V, CER	C1, C2, C12,
				79		C13, C18, C19, C20, C25, C26, C32,	C33, C38,
				79		C40, C48, C49, C50, C51, C54, C55	
				79		C57, C68, C73, C79, C80, C81,	C82, C83,
				79		C84, C85, C86, C87	
			1	78	907303652	RESISTOR, 36.5K	R128
			2	77	907302053	205K	R153, 154
				76			
			1	75	907324R30	24.3Ω, 1/8W, 1%	R148
			1	74	906900513	51K, 1/4W, 5%	R147
			1	73	905400104	100K, 1W, 5%	R146
			1	72	906900202	2K, 1/4W, 5%	R145
			2	71	9069007 54	750K, 1/4W, 5%	R150, 143
			2	70	907301500	150Ω, 1/8W, 1%	R138, R139
			2	69	907302000	200Ω, 1/8W, 1%	R136, R137
				68			
			3	67	907302052	20.5K, 1/8W, 1%	R161, R129, R130
			4	66	907308252	825K, 1/8W, 1%	R127, R132
				66			R133, R152
			4	65	907304122	RESISTOR, 41.2K, 1/8W 1%	R160, R159, R126, R131
			1	64	901100204	CAPACITOR, .2μf 1%	C3
			6	63	906900103	RESISTOR, 10K, 1/4W, 5%	R124, R141
				63		R140, R144,	R149, R151

LIST OF MATERIAL

A2 PWB ASSY P/L	Sierra	SIZE A	DRAWING NO. A03331500
	CODE IDENT NO. 54778	SCALE	SHEET 4 OF 7

BISHOP GRAPHICS/ACCUPRESS
REORDER NO. A-0480

QTY	QTY	QTY	QTY	ITEM	PART NO.	DESCRIPTION	REF.
				118			
			18	117	910504148	DIODE, IN4148	CR1-CR3, CR5-CR15
				117			CR23-CR31
			4	116	920207541	I.C., 7541	U28
				116			U29
				116			U32, U33
			5	115	920274374	74C374	U25, U26
				115		U27,	U30, U31
			1	114	920300581	AD581	U24
			1	113	920340340	LM340 - LAZ12	U23
			1	112	920204053	4053	U20
			1	111	920274175	74C175	U19
			1	110	920204051	4051	U17
			1	109	920301413	MC1413 OR ULN 2003	U15
			2	108	920204518	4518	U14, U16
			2	107	920204015	14015B	U12, U13
			1	106	920301595	1595	U11
			3	105	920207400	74C00	U9, U34
				105			U35
			1	104	920204040	4040	U8
			7	103	920210084	TL084	U7, U10
				103		U18, U21, U22, U37, U38	
			1	102	920300353	LF353	U5
			5	101	920210082	TL082 U44,	U4, U6
				101			U39, U42
			2	100	920204049	4049	U2, U3
			2	99	920204069	I.C., 4069	U1, U36
			2	98	901900241	CAPACITOR, 240 pf DIP MICA	C89, 90
			2	97	901900510	51 pf DIP MICA	C91, C92
			2	96	901900101	100 pf DIP MICA, 5%	C94, C95
			2	95	901410502	.005 UF, 1000V, CER	C70, C71
			4	94	902200156	15UF, 300V, ELECTROLYTIC	C62-C65
			2	93	901330224	.22 uF. 10%	C53, C56
			2	92	902700155	1.5UF, 10%, 20V, TANT	C60-C61
			2	91	901900560	56PF, 5%, 500V, DIP MICA	C59, C67
			2	90	903100102	.001 UF, 2%, 100V	C37, C47
				89	901300121	CAPACITOR, 120PF, 5%, NPO	C35

LIST OF MATERIAL

A2 PWB ASSY P/L

Sierra

CODE IDENT NO. 54778

SIZE A

DRAWING NO. A03331500

SCALE

SHEET 5 OF 7

BISHOP GRAPHICS/ACCUPRESS
REORDER NO. A-0480

QTY	QTY	QTY	QTY	ITEM	PART NO.	DESCRIPTION	REF.
			1	149	912200240	CRYSTAL, 51.780 KHZ	Y5
			1	148	912200243	CRYSTAL, 51.420 KHZ	Y4
			1	147	912200241	CRYSTAL, 82.320 KHZ	Y3
			1	146	912200242	CRYSTAL, 83.280 KHZ	Y2
			1	145	912200234	CRYSTAL, 1.028096 MHZ	Y1
			1	144	909900053	TRANSFORMER, ADC BUG. 4-0020	T2
			2	143	909910013	TRANSFORMER PT-3099	T1, T3
				142			
				141			
				140			
				139			
			3	138	9 31000006	C.V.P. (82-827CY6)	OVP1,
				138			OVP2, OVP3
				137			
				136			
			8	135	912600084	RELAY, DRY REED 925A05C2A	K1, K2, K3.
				135		K4, K5, K6, K7, K8	
				134			
				133			
				132			
				131			
			6	130	910303904	TRANSISTOR, 2N3904	Q4, Q5
				130			Q6-Q9
			1	129	910306516	TRANSISTOR. 2N6516	Q3
			1	128	910310039	TRANSISTOR, VN894F	Q2
			1	127	910310004	TRANSISTOR, MPSD04	Q1
			1	126	920300580	I.C., AD580K	U40
				125	920303130	I.C., CA3130	U41
			1	124	920300532	I.C., AD 532 MULTIPLIER	U43
			1	123	910800068	DIODE BRIDGE, VM68	DP1
				122			
			1	121	910635263	DIODE, 1N5263B ZENER	CR26
			2	120	910635254	DIODE, 1N5254B ZENER	CR24, CR25
			4	119	910804005	DIODE, 1N4005	CR20, CR21
				119			CR22, CR23
			5	118	910504001	DIODE, 1N4001	CR16, CR17
				8			CR18, CR19, CR27

LIST OF MATERIAL

A2 PWB ASSY P/L

ISI Sierra

CODE IDENT NO. 54778

SIZE A

DRAWING NO. A03331500

SCALE

SHEET 6 OF 7

BISHOP GRAPHICS/ACCUPRESS
REORDER NO. A-0480

QTY	ITEM	PART NO.	DESCRIPTION	REF.
	186			
	185			
	184			
	183			
1	182	907308061	8.06K 1% 1/8 W	R173
1	181	906900822	8.2K 5% 1/4 W	R168
1	180	906900511	510 Ω 5% 1/4 W	R169
1	179	906900392	3.9K 5% 1/4 W	R170
	178			
2	177	920200604	I.C. TL604	U46,U47
	176			
1	175	901440102	CAPACITOR, 1000PF, 5%	C4
1	174	901330104	CAPACITOR, 0.1μF, 10%, 100V	C93
1	173	901900680	CAPACITOR, 68pF, DIP MICA 2%	C98
1	172	903100224	CAPACITOR, .22μF, 2%, MYLAR	C52
2	171	901910470	CAPACITOR, .47 1% D.M.	C99,C100
1	170	907307502	RESISTOR, 75.0K 1/8W 1%	R73
1	169	907301373	RESISTOR, 137K, 1/8W, 1%	R166
1	168	907301004	RESISTOR, 1M, 1/8W 1%	R155
1	167	907900290	RESISTOR, 1K, POT 10%	R163
	166	907301783	RESISTOR, 178K, 1/8W, 1%	R125
	165			
	164			
2	163	819204019	WASHER, LOCK #4	
	162			
	161	915100049	SPACER, T.05	
	160			
3	159	915100179	SWAGE STAND OFF, #6X.750	
	158			
2	157	909000146	INDUCTOR, 22 UH, 10%, 1/4W	L1,L2
	156			
2	155	800204088	SCREW, FILISTER HEAD, 4-40X.50	
	154			
1	153	914800341	CONNECTOR, 20 PIN SOCKET	J5
2	152	CC3328800	CONNECTOR, COFFLINK	J3,J4
2	151	914800352	CONNECTOR, 4 PIN RIGHT ANGLE LOCKING RAMP	J2,J6
	150	914800338	CONNECTOR, 50 PIN 90°	J1

LIST OF MATERIAL

A2 PWB ASSY P/L

LSi Sierra

CODE IDENT NO. 54778

SIZE A

DRAWING NO. CA03331500

SCALE

SHEET 7 OF 7

BISHOP GRAPHICS/ACCUPRESS
REORDER NO. A-0480

REVISIONS

SYM	DESCRIPTION	DATE	APPROVED
A	PILOT RUN RELEASE	5/6/80	
A3	PCO 3088, 3089, 3147,	6-30-80	
B	PILOT RUN RELEASE PER DCO 167	6/30/80	
B1	DCO 183	8/28/80	
B3	DCO 245, 262, 262A	"/6/80	
B4	DCO 368	12-2-80	
C	PRODUCTION RELEASE PER DCO 474	2-25-81	
D	ECO 17748 (S/N EFF. 177 & ON)	6-3-81	
E	ECO 17815 (S/N 107 & ON)	7-7-81	
E	ADD 809A-R PER ECO 17924 (TYPE 1)	11-9-81	
F	ECO 17996, 17996B	2-23-82	

NEXT ASSY	QTY	MODEL NO.
D03411300	1	809A

Sierra

LEAR SIEGLER, INC.
SIERRA ELECTRONIC DIVISION
MENLO PARK, CALIFORNIA 94025

CODE IDENT. NO. 54778

A4 P.W.B. ASSY L/M

DATE	SIZE	DRAWING NO.	REV
3/12/80	A	A03332500	F

BY D. BRUCE

APPV'D

STOCK AS

SHEET 1 OF 5

A71_14_1

QTY	QTY	QTY	QTY	ITEM	PART NO.	DESCRIPTION	REF.
				37			
				36			
				35			
				34			
			1	33	920816104	RES. PACK 100K 2% 16 PIN	RP5
			1	32	920610104	100K 2% 14 PIN	RP4
			3	31	920600153	15K 2% 16 PIN	RP2,3,6
			1	30	920610103	RES. PACK 10K 2% 16 PIN	RP1
				29			
			1	28	907307501	RESISTOR 7.50K 1/8W 1%	R41
			2	27	907304993	499K 1/8W 1%	R45,46
			2	26	907303093	309K 1/8W 1%	R39,40
			2	25	907304321	4.32K 1/8W 1%	R37,38
			1	24	906900222	2.2K 1/4W 5%	R51
			1	23	907301212	12.1K 1/8W 1%	R50
			1	22	906900271	270Ω 1/4W 5%	R49
			3	21	906900105	1M 1/4W 5%	R23,32,43
			1	20	907302611	2.61K 1/8W 1%	R42
			2	19	907304991	4.99K 1/8W 1%	R47,48
			1	18	906900204	200K 1/4W 5%	R27
			2	17	906900101	100Ω 1/4W 5%	R19,24
			1	16	906900220	22Ω 1/4W 5%	R22
			1	15	906900203	20K 1/4W 5%	R33
			1	14	906900221	220Ω 1/4W 5%	R21
			1	13	907301002	10.0K 1/8W 1%	R34
			3	12	906900102	1K 1/4W 5%	R20,35,36
			8	11	906900104	100K 1/4W 5%	R1,2,6,9,12,25,29,31
			7	10	906900103	10K 1/4W 5%	R7,8,11,16,26,28,39
			4	9	906900751	750Ω 1/4W 5%	R3,4,10,15
			1	8	907301001	1.0K 1/8W 1%	R44
			1	7	906900391	390Ω 1/4W 5%	R13
			1	6	906900392	3.9K 1/4W 5%	R14
			2	5	906900562	5.6K 1/4W 5%	R5,16
			1	4	906900122	RESISTOR 1.2K 1/4W 5%	R17
				3			
			1	2	904500710	A4 PWB (DO3332700)	
			REF	1	DO3332600	A4 PWB ASSY	

LIST OF MATERIAL

309A L/M
A4 ASSY

Sierra

CODE IDENT NO. 54778

SIZE A

DRAWING NO. AO3332500

SCALE ~

SHEET 2 OF 5

BISHOP GRAPHICS/ACCUPRESS

QTY	QTY	QTY	QTY	ITEM	PART NO.	DESCRIPTION	REF.
			1	111	920302651	I.C., 2651	U14
			1	110	920301489	1489A	U12
			1	109	920301488	1488	U11
			4	108	920327404	74LS04	U8,13,17,25
			1	107	920317474	74LS74	U7
			2	106	920204069	4069	U54,59
			1	105	920340340	LM340LAZ-12	U10
			1	104	920310320	LM320LZ-12	U9
			4	103	920303448	3448A	U1,2,5,6
			1	102	920368488	68488	U3
			3	101	920274373	I.C., 74C373	U4,22,23
				100			
				99			
				98			
				97			
				96			
				95			
			3	94	914200102	DIP SOCKET 28 PIN	
			3	93	914200092	DIP SOCKET 40 PIN	
			12	92	914200103	DIP SOCKET, 24 PIN	
				91			
				90			
				89			
				88			
			1	87	914800346	CONNECTOR, 24 PIN HEADER	J6
			1	86	914800356	6 PIN LOCKING WAFER	J5
			1	85	914800351	26 PIN HEADER RT	J4
			1	84	914800336	40 PIN HEADER	J3
			1	83	914800338	CONNECTOR, 50 PIN HEADER RT	J1
				82			
				81			
				80			
				79			
				78			
			1	77	922300002	SWITCH, SPST ROCKER DIP SWITCH	S4
			1	76	911000076	SWITCH, SPDT MOMENTARY CONTACT PC	S2
			1	75	911000112	SWITCH, SPDT	S1

LIST OF MATERIAL

309A L/M
A4 ASSY

Sierra

CODE IDENT NO. 54778

SIZE A

DRAWING NO. A0333250 001

SCALE ~

SHEET 4 OF 5

BISHOP GRAPHICS/ACCUPRESS

QTY	QTY	QTY	QTY	ITEM	PART NO.	DESCRIPTION	REF.
			1	143	915100049	INSULATOR	
				142			
				141			
			1	140	920210082	I.C., TL082	U51
			3	139	920207474	74C74	U26,56,60
				138			
				137			
				136			
			10	135	920202114	2114	U64-68, U70-74
			1	134	920274107	74C107	U57
			1	133	920204046	4046	U55
			1	132	920300536	AD536J	U49
			1	131	920317430	74LS30	U24
			1	130	920320002	REF-02	U53
			1	129	920207550	AD7550	U38
			3	128	920317420	74LS20	U18,34,45
			1	127	920307408	74LS08	U46
			2	126	920274154	74C154	U44,58
			1	125	920327400	74LS00	U43
			1	124	920374139	74LS139	U69
			1	123	920300311	LM311N	U40
			1	122	920307905	UA79M05AHC	U52
			1	121	920210084	TL084	U36
			2	120	920200508	HI-508A	U35,50
			3	119	920374138	74LS138	U32,48,62
			2	118	920204520	4520	U29,30
			3	117	920274374	74C374	U27,28,39
			4	116	920204518	4518	U33,42,47,61
			1	115	920303880	Z80A	U20
			2	114	920374245	74LS245	U21,31
				113	920205043	IH5043	U37
			2	112	920303882	I.C., Z80-CTC	U15,16

LIST OF MATERIAL

309A L/M
A4 ASSY

Si Sierra

CODE IDENT NO. 54778

SIZE A

DRAWING NO. A033325001

SCALE ~

SHEET 5 OF 5

BISHOP GRAPHICS/ACCUPRESS
REORDER NO. A-0480

THIS DRAWING AND SPECIFICATIONS SHOWN SHALL NOT BE COPIED OR USED WITHOUT WRITTEN CONSENT OF LEAR SIEGLER, INC., SIERRA ELECTRONIC DIVISION.

REVISIONS				
ZONE	LTR	DESCRIPTION	DATE	APPROVED
		SEE SHT 1		

NOTES

ULN-2803A

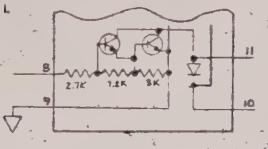

2. ALL RESISTORS ARE IN OHMS 1/4W, 5% UNLESS OTHERWISE SPECIFIED
3. ALL CAPACITORS ARE IN MICRO FARADS
4. ALL 1/8W RESISTORS ARE 1% TOLERANCE
5. DISPLAY SEGMENTS

TRUTH TABLE FOR U34 & U35

INPUT		Y1,X1	Y1,X2	Y1,X3	Y1,X4	Y2,X1	Y2,X2	Y2,X3	Y2,X4	Y3,X1	Y3,X2	Y3,X3	Y3,X4	Y4,X1	Y4,X2	Y4,X3	Y4,X4	Y5,X1	Y5,X2	Y5,X3	Y5,X4
DATA OUT	A	0	1	0	1	0	1	0	1	0	1	0	1	0	1	0	1	0	1	0	1
	B	0	0	1	1	0	0	1	1	0	0	1	1	0	0	1	1	0	0	1	1
	C	0	0	0	0	1	1	1	1	0	0	0	0	1	1	1	1	0	0	0	0
	D	0	0	0	0	0	0	0	0	1	1	1	1	1	1	1	1	0	0	0	0
	E	0	0	0	0	0	0	0	0	0	0	0	0	0	0	0	0	1	1	1	1

OMIT FOR MM84C922/MM74C922

QTY.	QTY.	QTY.	QTY.	ITEM NO.	PART OR IDENTIFYING NO.	DESCRIPTION OR NOMENCLATURE	MATERIAL	SPEC OR NOTE
						LIST OF MATERIAL OR PARTS LIST		

ALL THREADS UNIFIED SERIES EXTERNAL THREADS TO BE CLASS 2A, INTERNAL THREADS TO BE CLASS 2B AFTER FINISH UNLESS OTHERWISE SPECIFIED

32 √ FINISH ON ALL MACHINED SURFACES UNLESS OTHERWISE SPECIFIED

REMOVE ALL BURRS AND SHARP EDGES UNLESS OTHERWISE SPECIFIED

DO NOT SCALE DWG.

DIMENSIONS ARE IN INCHES AND INCLUDE FINISH THICKNESS UNLESS OTHERWISE SPECIFIED

TOLERANCE UNLESS SPECIFIED		
BASIC	TWO PLACE	THREE PLACE
UP TO 6	± .02	±
6 TO 24	± .03	±
ABOVE 24	± .06	±
ANGULAR DIMENSION	±	

FINISH

Sierra
A DIVISION OF LEAR SIEGLER INC.
MENLO PARK, CALIFORNIA 94025

CODE IDENT. NO. 54778

NOTES
AE/AS

ASSY OR ITEM	QTY. REQ'D	NEXT ASSY	MODEL NO.
		APPLICATION	

DATE	SIZE	DRAWING NO.	REV
BY	D	D03333400	
CHECKED	SCALE	STOCK AS	SHEET 1 OF 2
APPD			

D03333400

THIS DRAWING AND SPECIFICATIONS SHOWN SHALL NOT BE COPIED OR USED WITHOUT WRITTEN CONSENT OF LEAR SIEGLER, INC., SIERRA ELECTRONIC DIVISION.

ZONE	LTR	DESCRIPTION		
	A	PILOT RUN RELEASE		
	A1	PCO 3056		
	B	PILOT RUN RELEASE PER DCO		
	B1	DCO NO. 184		
	B2	DCO NO. 369		
	C	PRODUCTION REL PER ECO 17[illegible]		
	D	ECO 17741	5/4/[illegible]	
	D	ADD 809A-R PER ECO 17924 (TYPE I)		
	D	CHANGE TO 809BR PER ECO 802		
	D2	REMOVE 809BR PER ECO 18067		

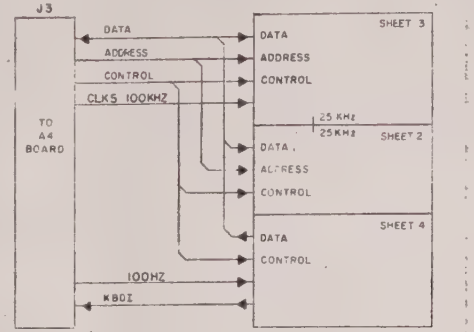

FOR L/M SEE [illegible]

QTY.	QTY.	QTY	QTY.	ITEM NO	PART OR IDENTIFYING NO.	DESCRIPTION OR NOMENCLATURE	MATERIAL	SPEC OR NOTE

LIST OF MATERIAL OR PARTS LIST

ALL THREADS UNIFIED SERIES. EXTERNAL THREADS TO BE CLASS 2A. INTERNAL THREADS TO BE CLASS 2B. AFTER FINISH UNLESS OTHERWISE SPECIFIED.

√ FINISH ON ALL MACHINED SURFACES UNLESS OTHERWISE SPECIFIED.

REMOVE ALL BURRS AND SHARP EDGES UNLESS OTHERWISE SPECIFIED.

DO NOT SCALE DWG.

DIMENSIONS ARE IN INCHES AND INCLUDE FINISH THICKNESS UNLESS OTHERWISE SPECIFIED.

TOLERANCE UNLESS SPECIFIED

BASIC	TWO PLACE	THREE PLACE
UP TO 6	± .02	±
6 TO 24	± .03	±
ABOVE 24	± .06	±
ANGULAR DIMENSION ±		
FINISH:		

Sierra
A DIVISION OF LEAR SIEGLER INC
MENLO PARK, CALIFORNIA 94025

CODE IDENT. NO. 54778

SCHEMATIC, A5/A6 PWB
KEYBOARD BLOCK

ASSY OR ITEM	QTY. NEXT	NEXT ASSY.	MODEL NO.
			RCSA

APPLICATION

DATE
BY
CHECKED
APPR

SIZE D | DRAWING NO. D03333400 | REV.

SCALE | STOCK AS | SHEET 1 OF 14

THIS DRAWING AND SPECIFICATIONS SHOWN SHALL NOT BE COPIED OR USED WITHOUT WRITTEN CONSENT OF LEAR SIEGLER, INC., SIERRA ELECTRONIC DIVISION.

REVISIONS				
ZONE	LTR	DESCRIPTION	DATE	APPROVED
		SEE SHT 1		

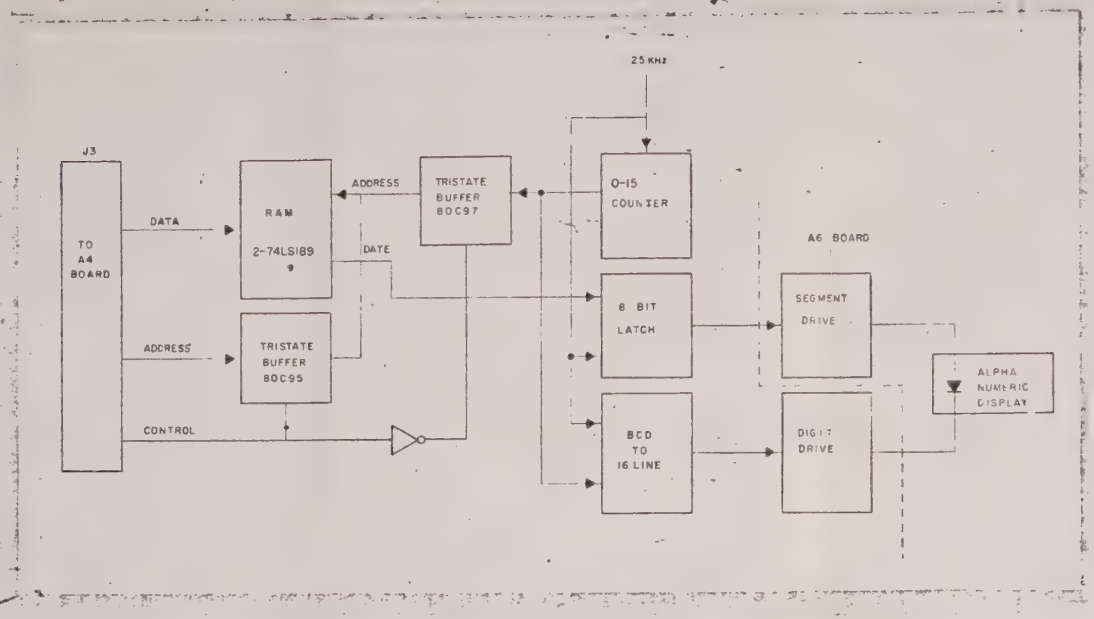

QTY.	QTY.	QTY.	QTY.	ITEM NO	PART OR IDENTIFYING NO.	DESCRIPTION OR NOMENCLATURE	MATERIAL	SPEC OR NOTE

LIST OF MATERIAL OR PARTS LIST

ALL THREADS UNIFIED SERIES. EXTERNAL THREADS TO BE CLASS 2A. INTERNAL THREADS TO BE CLASS 2B AFTER FINISH UNLESS OTHERWISE SPECIFIED.

FINISH ON ALL MACHINED SURFACES UNLESS OTHERWISE SPECIFIED.

REMOVE ALL BURRS AND SHARP EDGES UNLESS OTHERWISE SPECIFIED.

DO NOT SCALE DWG.

DIMENSIONS ARE IN INCHES AND INCLUDE FINISH THICKNESS UNLESS OTHERWISE SPECIFIED

TOLERANCE UNLESS SPECIFIED

BASIC	TWO PLACE	THREE PLACE
UP TO 6	± .02	±
6 TO 24	± .03	±
ABOVE 24	± .06	±

ANGULAR DIMENSION ±

FINISH:

ASSY OR ITEM	QTY NEXT	NEXT ASSY.	MODEL NO.
		APPLICATION	

Sierra
A DIVISION OF LEAR SIEGLER, INC.
MENLO PARK, CALIFORNIA 94025

CODE IDENT. NO 54778

15/46

DATE	SIZE	DRAWING NO.	REV.
4-7-[illegible]	D	D03333400	[illegible]

BY: [illegible]
CHECKED
APPR
SCALE
STOCK AS
SHEET 2 OF 14

DWG. NO. D03333400

THIS DRAWING AND SPECIFICATIONS SHOWN SHALL NOT BE COPIED OR USED WITHOUT WRITTEN CONSENT OF LEAR SIEGLER, INC., SIERRA ELECTRONIC DIVISION.

REVISIONS				
ZONE	LTR	DESCRIPTION	DATE	APPROVED
		SEE [illegible]		

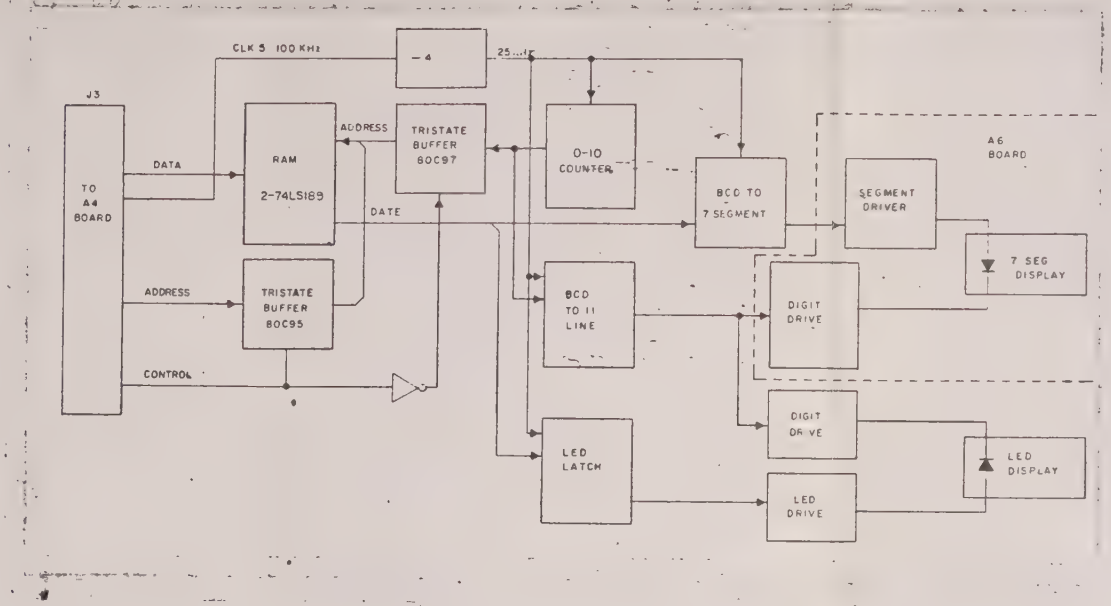

QTY	QTY	QTY	QTY	ITEM NO.	PART OR IDENTIFYING NO.	DESCRIPTION OR NOMENCLATURE	MATERIAL	SPEC OR NOTE
						LIST OF MATERIAL OR PARTS LIST		

ALL THREADS UNIFIED SERIES, EXTERNAL THREADS TO BE CLASS 2A, INTERNAL THREADS TO BE CLASS 2B AFTER FINISH UNLESS OTHERWISE SPECIFIED

63 FINISH ON ALL MACHINED SURFACES UNLESS OTHERWISE SPECIFIED

REMOVE ALL BURRS AND SHARP EDGES UNLESS OTHERWISE SPECIFIED

DO NOT SCALE DWG

DIMENSIONS ARE IN INCHES AND INCLUDE FINISH THICKNESS UNLESS OTHERWISE SPECIFIED

TOLERANCE UNLESS SPECIFIED		
BASIC	TWO PLACE	THREE PLACE
UP TO 6	± .02	±
6 TO 24	± .03	±
ABOVE 24	± .06	±
ANGULAR DIMENSION ±		

FINISH

Sierra
A DIVISION OF LEAR SIEGLER INC
MENLO PARK, CALIFORNIA 94025

CODE IDENT NO 54778

A5/A6 KEYBOARD BLOCK DIAGRAM

ASSY OR ITEM	QTY NEXT	NEXT ASSY	MODEL NO
		APPLICATION	

DATE
BY
CHECKED
APPR

SIZE D | DRAWING NO. D0333400 | REV -

SCALE | STOCK AS | SHEET

THIS DRAWING AND SPECIFICATIONS SHOWN SHALL NOT BE COPIED OR USED WITHOUT WRITTEN CONSENT OF LEAR SIEGLER, INC., SIERRA ELECTRONIC DIVISION.

REVISIONS				
ZONE	LTR	DESCRIPTION	DATE	APPROVED
		SEE SHT 2		

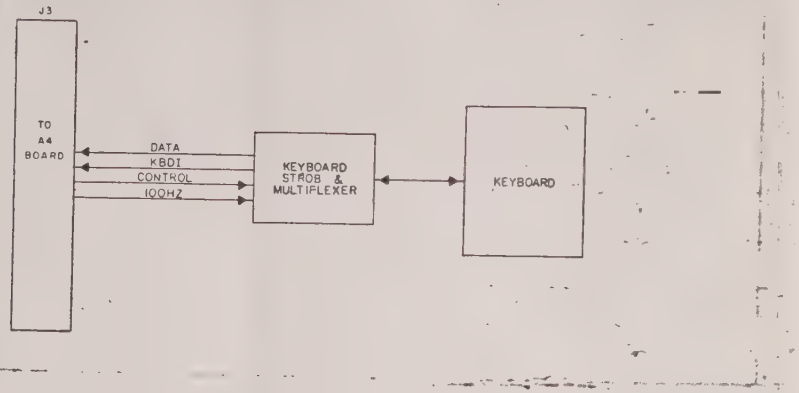

QTY.	QTY.	QTY.	QTY.	ITEM NO.	PART OR IDENTIFYING NO.	DESCRIPTION OR NOMENCLATURE	MATERIAL	SPEC OR NOTE
						LIST OF MATERIAL OR PARTS LIST		

ALL THREADS UNIFIED SERIES EXTERNAL THREADS TO BE CLASS 2A, INTERNAL THREADS TO BE CLASS 2B AFTER FINISH UNLESS OTHERWISE SPECIFIED

63 FINISH ON ALL MACHINED SURFACES UNLESS OTHERWISE SPECIFIED

REMOVE ALL BURRS AND SHARP EDGES UNLESS OTHERWISE SPECIFIED

DO NOT SCALE DWG.

DIMENSIONS ARE IN INCHES AND INCLUDE FINISH THICKNESS UNLESS OTHERWISE SPECIFIED

TOLERANCE UNLESS SPECIFIED		
BASIC	TWO PLACE	THREE PLACE
UP TO 6	± .02	±
6 TO 24	± .03	±
ABOVE 24	± .06	±
ANGULAR DIMENSION ±		

FINISH

Sierra
A DIVISION OF LEAR SIEGLER INC.
MENLO PARK, CALIFORNIA 94025

CODE IDENT. NO. 54778

A5/A6 KEYBOARD BLOCK DIAGRAM

ASSY OR ITEM	QTY. REQ'T	NEXT ASSY.	MODEL NO
		APPLICATION	

DATE
BY
CHECKED
APPR

SIZE D | DRAWING NO. D03333400 | REV. D

SCALE | STOCK AS | SHEET

D03333400

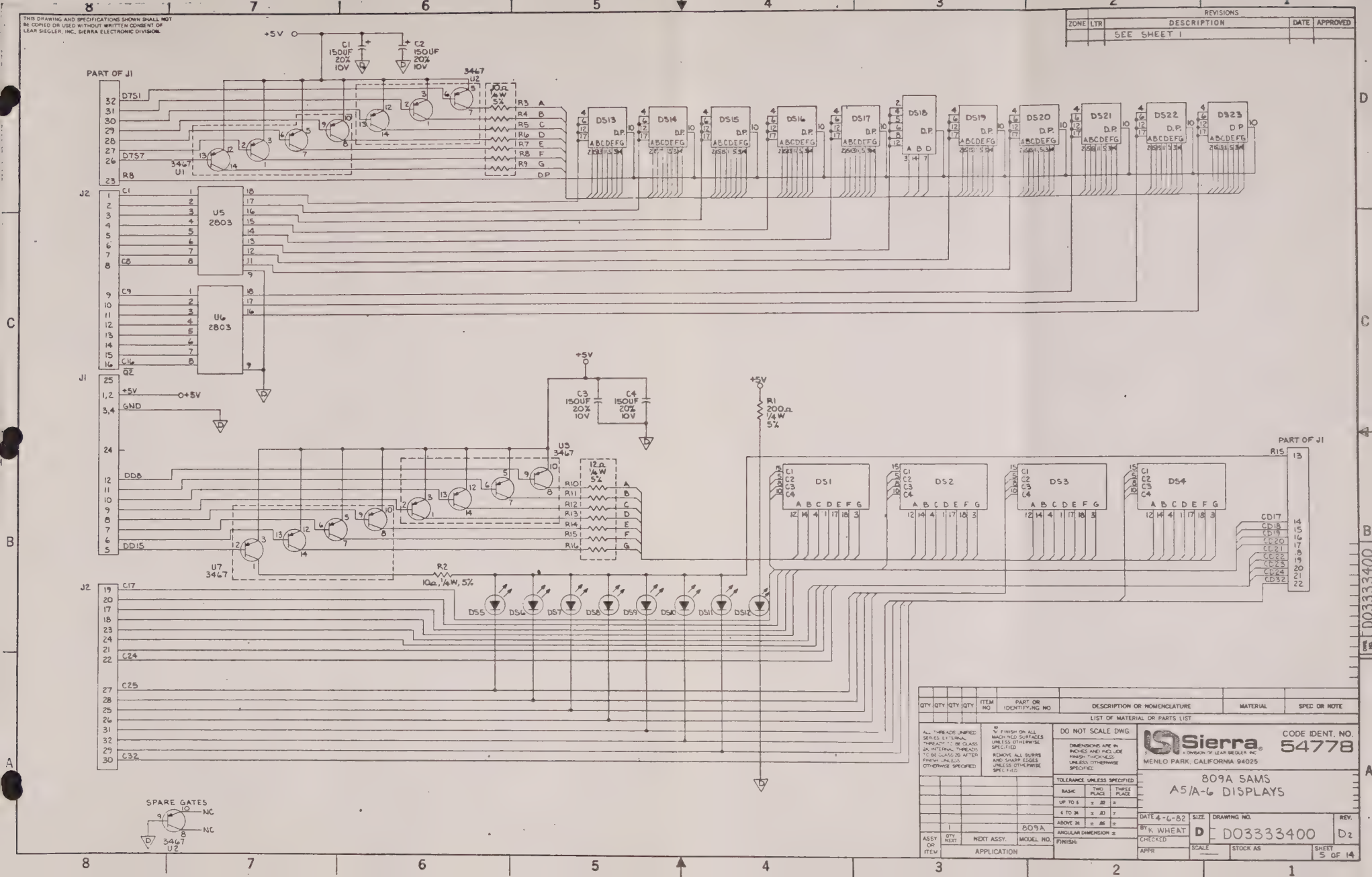
THIS DRAWING AND SPECIFICATIONS SHOWN SHALL NOT BE COPIED OR USED WITHOUT WRITTEN CONSENT OF LEAR SIEGLER, INC. SIERRA ELECTRONIC DIVISION.
REVISIONS
ZONE LTR DESCRIPTION DATE APPROVED
SEE SHEET 1
+5V
C1 150UF 20% 10V
C2 150UF 20% 10V
PART OF J1
DTS1
DTS7
RB
3467 U1
3467 U2
10Ω 1/4W 5%
R3 A
R4 B
R5 C
R6 D
R7 E
R8 F
R9 G
DP
DS13 D.P.
DS14 D.P.
DS15 D.P.
DS16 D.P.
DS17 D.P.
DS18 D.P.
DS19 D.P.
DS20 D.P.
DS21 D.P.
DS22 D.P.
DS23 D.P.
ABCDEFG
J2
C1
C8
C9
C16
U5 2803
U6 2803
QZ
J1
+5V
GND
C3 150UF 20% 10V
C4 150UF 20% 10V
R1 200Ω 1/4W 5%
U3 3467
12Ω 1/4W 5%
R10
R11
R12
R13
R14
R15
R16
DD8
DD15
U7 3467
R2 10Ω, 1/4W, 5%
DS1
DS2
DS3
DS4
C1 C2 C3 C4
A B C D E F G
PART OF J1
R15
CD17
CD18
CD19
CD20
CD21
CD22
CD23
CD24
CD32
C17
C24
C25
C32
DS5 DS6 DS7 DS8 DS9 DS10 DS11 DS12
SPARE GATES
NC
NC
3467 U2
QTY QTY QTY QTY ITEM NO PART OR IDENTIFYING NO DESCRIPTION OR NOMENCLATURE MATERIAL SPEC OR NOTE
LIST OF MATERIAL OR PARTS LIST
ALL THREADS UNIFIED SERIES EXTERNAL THREADS TO BE CLASS 2A INTERNAL THREADS TO BE CLASS 2B AFTER FINISH UNLESS OTHERWISE SPECIFIED
32 √ FINISH ON ALL MACHINED SURFACES UNLESS OTHERWISE SPECIFIED
REMOVE ALL BURRS AND SHARP EDGES UNLESS OTHERWISE SPECIFIED
DO NOT SCALE DWG.
DIMENSIONS ARE IN INCHES AND INCLUDE FINISH THICKNESS UNLESS OTHERWISE SPECIFIED
TOLERANCE UNLESS SPECIFIED
BASIC TWO PLACE THREE PLACE
UP TO 6 ± .02 ± .
6 TO 24 ± .03 ± .
ABOVE 24 ± .06 ± .
ANGULAR DIMENSION ±
FINISH:
Sierra. A DIVISION OF LEAR SIEGLER INC
MENLO PARK, CALIFORNIA 94025
CODE IDENT. NO. 54778
809A SAMS
A5/A-6 DISPLAYS
DATE 4-6-82
BY K. WHEAT
CHECKED
APPR
SIZE D
DRAWING NO. D03333400
REV. D2
SCALE
STOCK AS
SHEET 5 OF 14
ASSY OR ITEM
QTY NEXT
NEXT ASSY.
MODEL NO. 809A
APPLICATION
D03333400

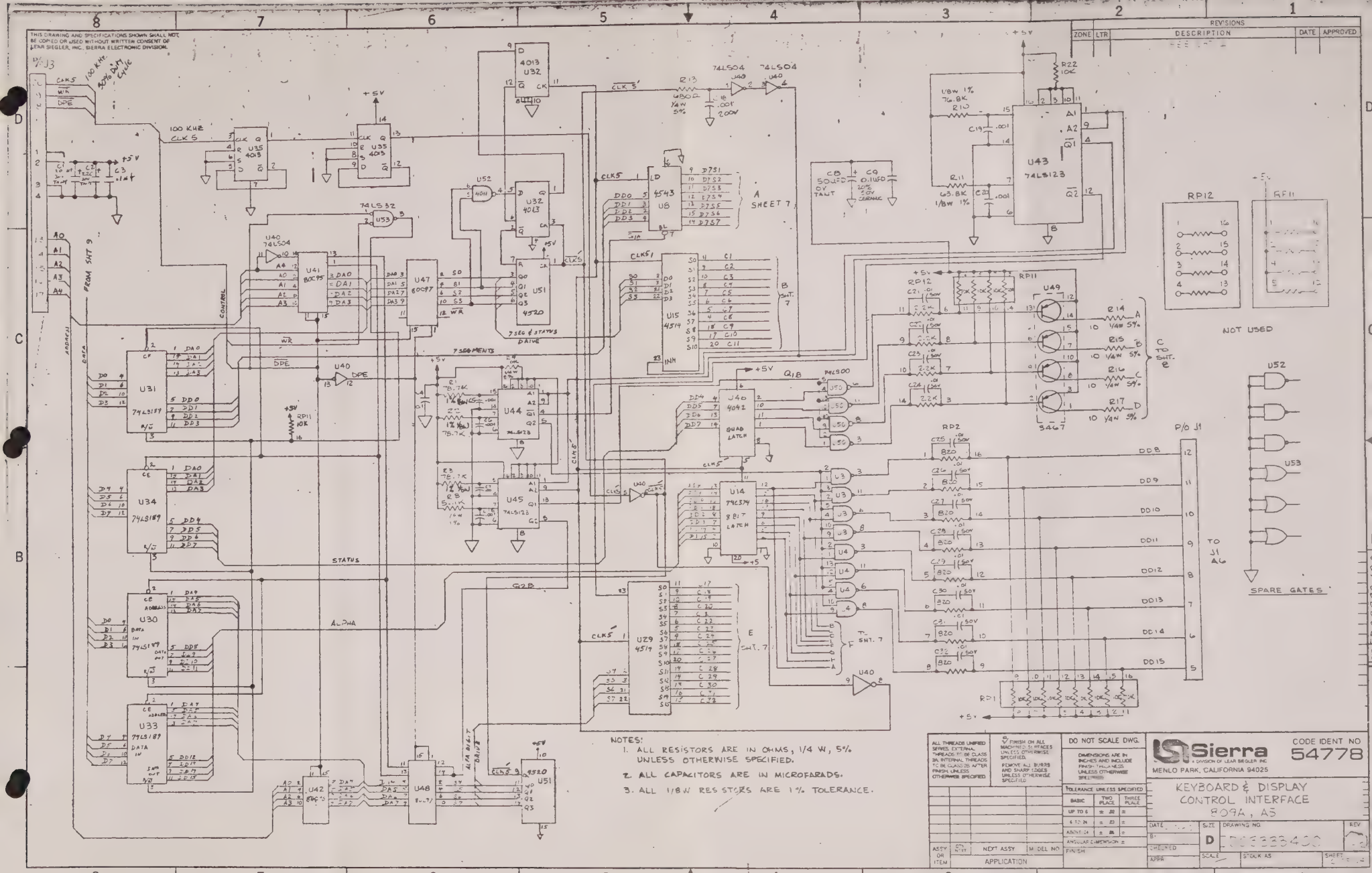
THIS DRAWING AND SPECIFICATIONS SHOWN SHALL NOT BE COPIED OR USED WITHOUT WRITTEN CONSENT OF LEAR SIEGLER, INC., SIERRA ELECTRONIC DIVISION.
REVISIONS
ZONE
LTR
DESCRIPTION
DATE
APPROVED
NOTES:
1. ALL RESISTORS ARE IN OHMS, 1/4 W, 5% UNLESS OTHERWISE SPECIFIED.
2. ALL CAPACITORS ARE IN MICROFARADS.
3. ALL 1/8W RESISTORS ARE 1% TOLERANCE.
ALL THREADS UNIFIED SERIES, EXTERNAL THREADS TO BE CLASS 2A, INTERNAL THREADS TO BE CLASS 2B AFTER FINISH, UNLESS OTHERWISE SPECIFIED
FINISH ON ALL MACHINED SURFACES UNLESS OTHERWISE SPECIFIED.
REMOVE ALL BURRS AND SHARP EDGES UNLESS OTHERWISE SPECIFIED
DO NOT SCALE DWG.
DIMENSIONS ARE IN INCHES AND INCLUDE FINISH THICKNESS UNLESS OTHERWISE SPECIFIED
TOLERANCE UNLESS SPECIFIED
BASIC
TWO PLACE
THREE PLACE
UP TO 6
6 TO 24
ABOVE 24
ANGULAR DIMENSION ±
FINISH
ASSY OR ITEM
QTY NEXT
NEXT ASSY
MODEL NO
APPLICATION
Sierra
A DIVISION OF LEAR SIEGLER INC.
MENLO PARK, CALIFORNIA 94025
CODE IDENT NO
54778
KEYBOARD & DISPLAY
CONTROL INTERFACE
809A, A5
DATE
B
CHECKED
APPR
SIZE
D
DRAWING NO
REV
SCALE
STOCK AS
SHEET
NOT USED
SPARE GATES
P/O J1
TO J1 A6
C TO SHT. 8
A SHEET 7
B SHT. 7
E SHT. 7
F TO SHT. 7
FROM SHT 9
7 SEG & STATUS DRIVE
7 SEGMENTS
STATUS
ALPHA
CONTROL
ADDRESS
DATA
100 KHZ
50% DUTY CYCLE
100 KHZ CLK 5
U31 74LS189
U34 74LS189
U30 74LS189
U33 74LS189
U35 4013
U32 4013
U41 80C95
U47 80C97
U51 4520
U44 74LS123
U45 74LS123
U40 74LS04
U40 4042 QUAD LATCH
U14 74LS74 8 BIT LATCH
U15 4514
U29 4514
U8 4543
U43 74LS123
U49 3467
U52
U53
U48
U42
U51 4520
RP1
RP2
RP11
RP12
RP11
R22 10K
R13 680Ω 1/4W 5%
R10 1/8W 1% 76.8K
R11 63.8K 1/8W 1%
R14 1/4W 5%
R15 1/4W 5%
R16 1/4W 5%
R17 1/4W 5%
C8 50UFD 0V TANT
C9 0.1UFD 20% 50V CERAMIC
+5V

THIS DRAWING AND SPECIFICATIONS SHOWN SHALL NOT BE COPIED OR USED WITHOUT WRITTEN CONSENT OF SEAN SIEGLER, INC. SIERRA ELECTRONIC DIVISION.

REVISIONS

ZONE	LTR	DESCRIPTION	DATE	APPROVED
		SEE [illegible]		

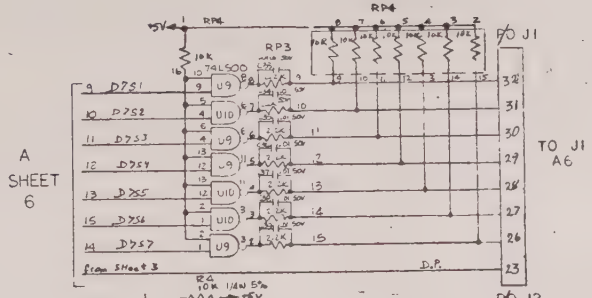

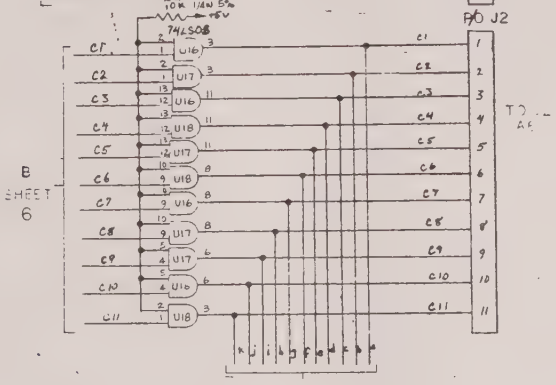

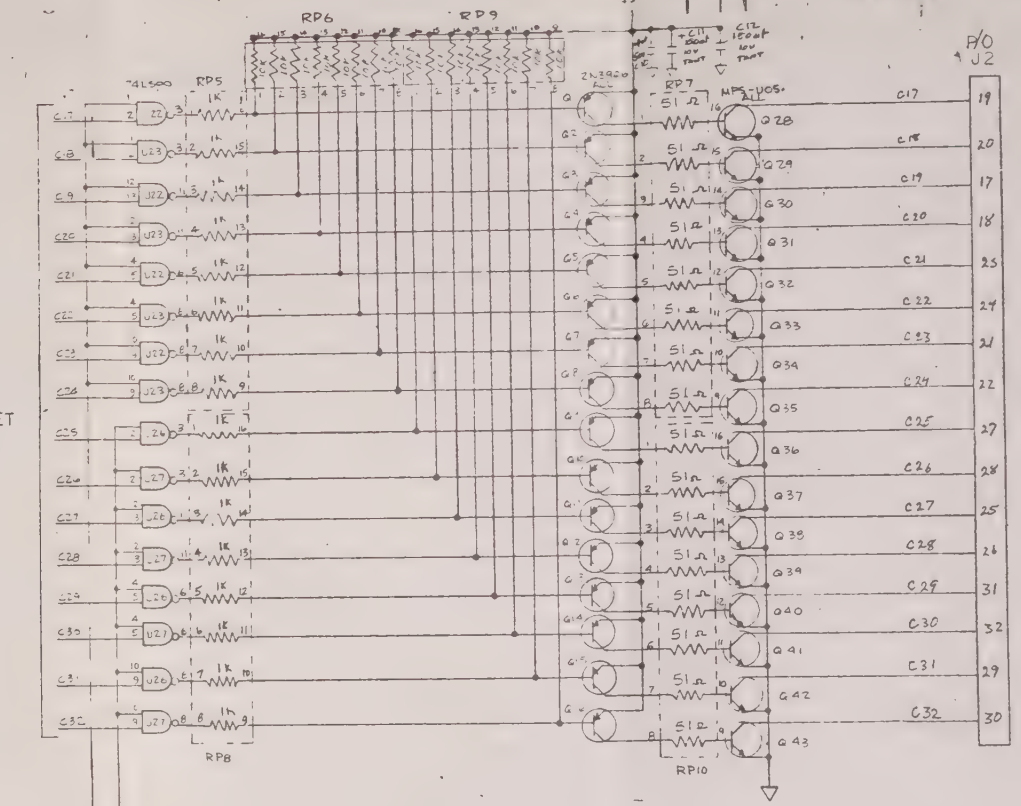

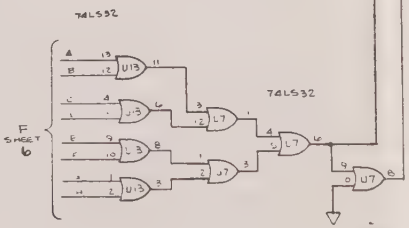

QTY.	QTY.	QTY.	ITEM NO.	PART OR IDENTIFYING NO.	DESCRIPTION OR NOMENCLATURE	MATERIAL	SPEC OR NOTE

LIST OF MATERIAL OR PARTS LIST

ALL THREADS UNIFIED SERIES, EXTERNAL THREADS TO BE CLASS 3A, INTERNAL THREADS TO BE CLASS 2B AFTER FINISH UNLESS OTHERWISE SPECIFIED

FINISH ON ALL MACHINED SURFACES UNLESS OTHERWISE SPECIFIED

REMOVE ALL BURRS AND SHARP EDGES UNLESS OTHERWISE SPECIFIED

DO NOT SCALE DWG.

DIMENSIONS ARE IN INCHES AND INCLUDE FINISH THICKNESS UNLESS OTHERWISE SPECIFIED

TOLERANCE UNLESS SPECIFIED		
BASIC	TWO PLACE	THREE PLACE
UP TO 6	± .02	±
6 TO 24	± .03	±
ABOVE 24	± .06	±
ANGULAR DIMENSION ±		
FINISH		

Sierra
A DIVISION OF LEAR SIEGLER INC
MENLO PARK, CALIFORNIA 94025

CODE IDENT. NO. 54778

A5 KEY BOARD DISPLAY CONTROL & INTERFACE

ASSY OR ITEM	QTY. NEXT	NEXT ASSY	MODEL NO
		APPLICATION	

DATE
BY
CHECKED
APPR

SIZE D | DRAWING NO. D03333400 | REV -01

SCALE NONE | STOLN AS | SHEET 1 OF 4

THIS DRAWING AND SPECIFICATIONS SHOWN SHALL NOT BE COPIED OR USED WITHOUT WRITTEN CONSENT OF LEAR SIEGLER INC., SIERRA ELECTRONIC DIVISION.

REVISIONS				
ZONE	LTR	DESCRIPTION	DATE	APPROVED
		SEE SHT 2		

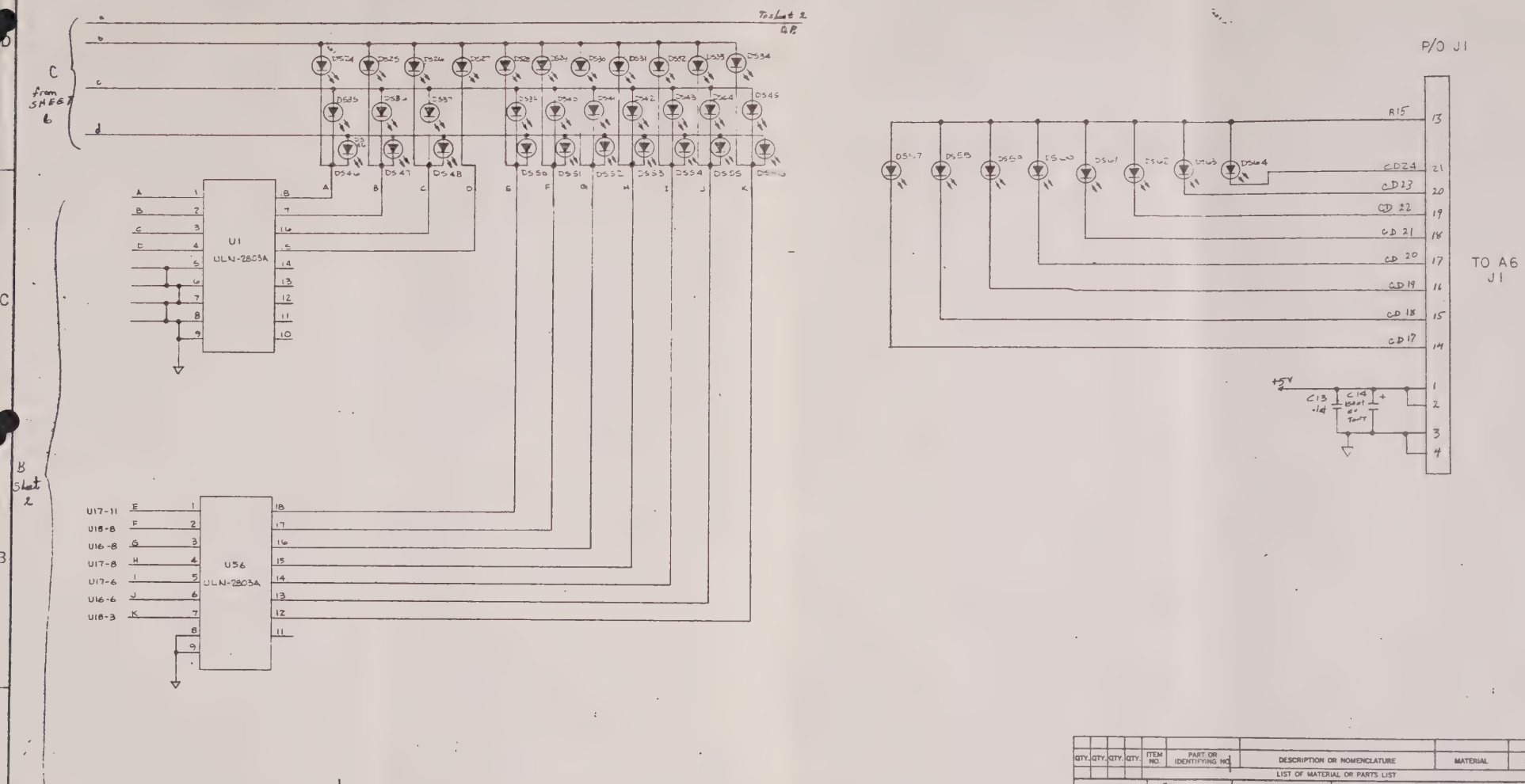

QTY.	QTY.	QTY.	QTY.	ITEM NO.	PART OR IDENTIFYING NO.	DESCRIPTION OR NOMENCLATURE	MATERIAL	SPEC OR NOTE

LIST OF MATERIAL OR PARTS LIST

ALL THREADS UNIFIED SERIES EXTERNAL THREADS TO BE CLASS 2A INTERNAL THREADS TO BE CLASS 2B AFTER FINISH UNLESS OTHERWISE SPECIFIED

FINISH ON ALL MACHINED SURFACES UNLESS OTHERWISE SPECIFIED

REMOVE ALL BURRS AND SHARP EDGES UNLESS OTHERWISE SPECIFIED

DO NOT SCALE DWG.

DIMENSIONS ARE IN INCHES AND INCLUDE FINISH ON SHEET UNLESS OTHERWISE SPECIFIED

TOLERANCE UNLESS SPECIFIED

BASIC	TWO PLACE	THREE PLACE
UP TO 6	± .02	±
6 TO 24	± .03	±
ABOVE 24	± .06	±

ANGULAR DIMENSION ±

FINISH

ASSY OR ITEM	QTY NEXT	NEXT ASSY	MODEL NO
		FINAL ASSY	

APPLICATION

Sierra
A DIVISION OF LEAR SIEGLER INC
MENLO PARK, CALIFORNIA 94025

CODE IDENT. NO. 54778

A5 KEYBOARD & DISPLAY CONTROL & INTERFACE

DATE	SIZE	DRAWING NO.	REV.
BY	D	D03333400	
CHECKED			
APPR	SCALE NONE	STOCK AS	SHEET

THIS DRAWING AND SPECIFICATIONS SHOWN SHALL NOT BE COPIED OR USED WITHOUT WRITTEN CONSENT OF LEAR SIEGLER, INC., SIERRA ELECTRONIC DIVISION.

REVISIONS				
ZONE	LTR	DESCRIPTION	DATE	APPROVED
		ECO # 1		

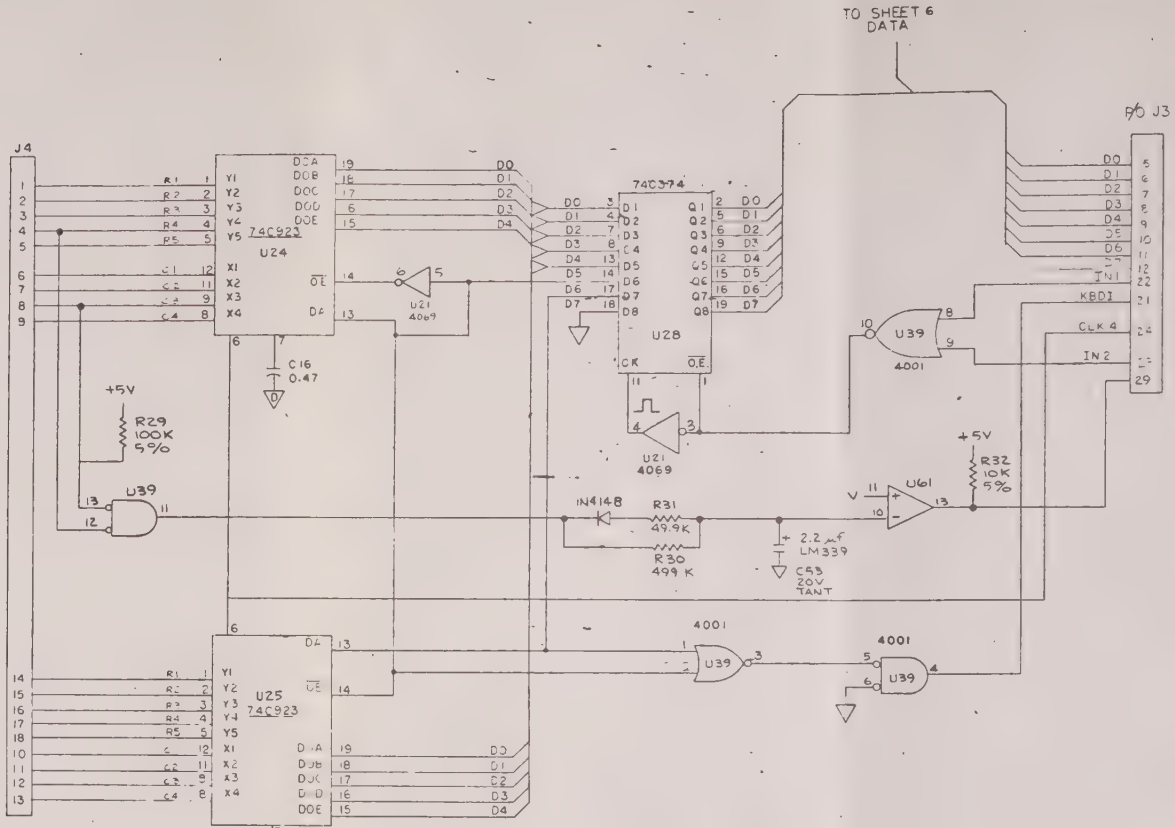

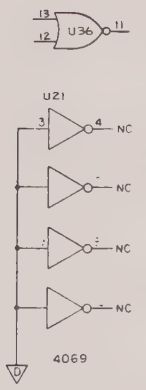

SPARE GATES

QTY	QTY	QTY	QTY	ITEM NO	PART OR IDENTIFYING NO.	DESCRIPTION OR NOMENCLATURE	MATERIAL	SPEC OR NOTE
						LIST OF MATERIAL OR PARTS LIST		

ALL THREADS UNIFIED SERIES, EXTERNAL THREADS 2A CLASS, INTERNAL THREADS 2B CLASS AFTER FINISH, UNLESS OTHERWISE SPECIFIED

63 √ FINISH ON ALL MACHINED SURFACES UNLESS OTHERWISE SPECIFIED

REMOVE ALL BURRS AND SHARP EDGES UNLESS OTHERWISE SPECIFIED

DO NOT SCALE DWG.

DIMENSIONS ARE IN INCHES AND INCLUDE FINISH THICKNESS UNLESS OTHERWISE SPECIFIED

TOLERANCE UNLESS SPECIFIED		
BASIC	TWO PLACE	THREE PLACE
UP TO 6	± .02	±
6 TO 24	± .03	±
ABOVE 24	± .06	±
ANGULAR DIMENSION ±		

FINISH

Sierra — A DIVISION OF LEAR SIEGLER INC
MENLO PARK, CALIFORNIA 94025

CODE IDENT. NO. 54778

809A SAMS
A5-KEYBOARD

ASSY OR ITEM	QTY NEXT ASSY	NEXT ASSY	MODEL NO.
		APPLICATION	

DATE 4-7-82 | BY | CHECKED | APPR

SIZE D | DRAWING NO. D03333400 | REV. 2

SCALE NONE | STOCK AS | SHEET 9 OF 14

D03333400

THIS DRAWING AND SPECIFICATIONS SHOWN SHALL NOT BE COPIED OR USED WITHOUT WRITTEN CONSENT OF LEAR SIEGLER, INC. SIERRA ELECTRONIC DIVISION.

REVISIONS			
ZONE	LTR	DESCRIPTION	DATE	APPROVED
		SEE SHT		

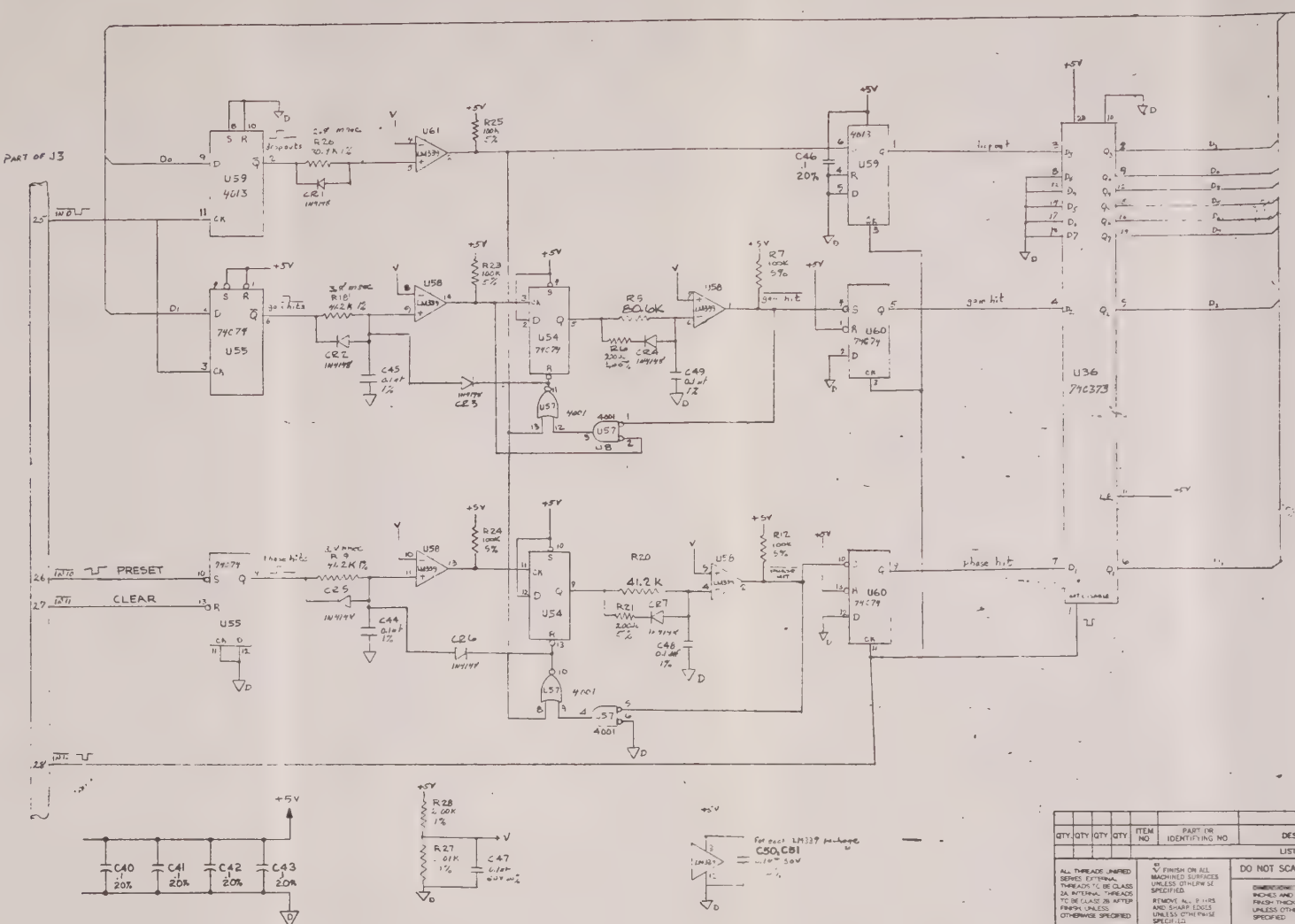

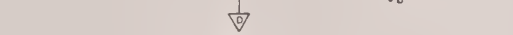

QTY	QTY	QTY	QTY	ITEM NO	PART OR IDENTIFYING NO	DESCRIPTION OR NOMENCLATURE	MATERIAL	SPEC OR NOTE
						LIST OF MATERIAL OR PARTS LIST		

ALL THREADS UNIFIED SERIES EXTERNAL THREADS TO BE CLASS 2A INTERNAL THREADS TO BE CLASS 2B AFTER FINISH, UNLESS OTHERWISE SPECIFIED

63 √ FINISH ON ALL MACHINED SURFACES UNLESS OTHERWISE SPECIFIED. REMOVE ALL BURRS AND SHARP EDGES UNLESS OTHERWISE SPECIFIED

DO NOT SCALE DWG.

DIMENSIONS ARE IN INCHES AND INCLUDE FINISH THICKNESS UNLESS OTHERWISE SPECIFIED

TOLERANCE UNLESS SPECIFIED		
BASIC	TWO PLACE	THREE PLACE
UP TO 6	± .01	±
6 TO 24	± .02	±
ABOVE 24	± .05	±
ANGULAR DIMENSION ±		

FINISH:

Sierra
A DIVISION OF LEAR SIEGLER INC
MENLO PARK, CALIFORNIA 94025

CODE IDENT. NO. 54778

A5 KEYBOARD DISPLAY CONTROL & INTERFACE (DROPOUTS GAIN HITS & PHASE HITS)

ASSY OR ITEM	KIT	NEXT ASSY	MODEL NO
		APPLICATION	

DATE	SIZE	DRAWING NO.	REV.
BY	D	D03333400	D2
CHECKED	SCALE	STOCK AS	SHEET 10 OF 14
APPR			

D03333400

THIS DRAWING AND SPECIFICATIONS SHOWN SHALL NOT BE COPIED OR USED WITHOUT WRITTEN CONSENT OF LEAR SIEGLER, INC., SIERRA ELECTRONIC DIVISION.

REVISIONS				
ZONE	LTR	DESCRIPTION	DATE	APPROVED
		SEE SHT 1		

TABLE A
CODE

NUMBER	DS18 SIGN	D7	D6	D5	D4	D3	D2	D1	D0	HEX
0	+	X	X	X	X	1	1	1	1	XF
1	−	X	X	X	X	1	1	1	0	XE
2	+	X	X	X	X	1	1	0	1	XD
3	+	X	X	X	X	1	1	0	0	XC
4	−	X	X	X	X	1	0	1	1	XB
5	!	X	X	X	X	1	0	1	0	XA
6	!	X	X	X	X	1	0	0	1	X9
7	⊥	X	X	X	X	1	0	0	0	X8
8	+	X	X	X	X	0	1	1	1	X7
9	+	X	X	X	X	0	1	1	0	X6
BLANK	BLANK	X	X	X	X	0	1	0	1	X5
BLANK	BLANK	X	X	X	X	0	1	0	0	X4
BLANK	BLANK	X	X	X	X	0	0	1	1	X3
BLANK	BLANK	X	X	X	X	0	0	1	0	X2
BLANK	BLANK	X	X	X	X	0	0	0	1	X1
BLANK	BLANK	X	X	X	X	0	0	0	0	X0

DIGIT	ADDRESS (HEX)	DATA
7 SEG 13	00	SEE TABLE A
14	01	
15	02	
16	03	
17	04	
18	05	
19	06	
20	07	
21	08	
22	09	
7 SEG 23	0A	
ALPHA 1 (A)	10	SEE TABLE B
1 (B)	11	
1 (C)	12	
1 (D)	13	
2 (A)	14	
2 (B)	15	
2 (C)	16	
2 (D)	17	
3 (A)	18	
3 (B)	19	
3 (C)	1A	
3 (D)	1B	
4 (A)	1C	
4 (B)	1D	
4 (C)	1E	
4 (D)	1F	

TABLE B

ALPHA CHARACTER	SEGMENT DATA	STATUS LED	WORD A BINARY G1	F1	E1	D1	C1	B1	A1	HEX X=0	STATUS LED	WORD B BINARY G2	F2	E2	D2	C2	B2	A2	HEX X=0
		D7	D6	D5	D4	D3	D2	D1	D0		D7	D6	D5	D4	D3	D2	D1	D0	
A		X	1	1	1	0	0	0	0	70	X	1	1	1	0	0	0	1	71
G		X	1	1	0	1	1	1	0	6E	X	1	1	0	0	0	0	0	60
C		X	1	1	1	1	0	0	0	78	X	1	1	1	1	1	1	0	7E
D		X	1	1	0	1	1	1	0	6E	X	1	1	0	1	0	0	0	68
E		X	1	1	1	0	0	0	0	70	X	1	1	1	1	1	1	0	7E
F		X	1	1	1	0	0	0	0	70	X	1	1	1	1	1	1	1	7F
G		X	1	1	1	1	0	0	0	78	X	1	1	1	0	0	1	0	72
H		X	1	1	1	0	0	0	1	71	X	1	1	1	0	0	0	1	71
I		X	1	1	0	1	1	1	0	6E	X	1	1	0	1	1	1	0	6E
J		X	1	1	1	1	0	1	1	7B	X	1	1	1	1	0	0	0	78
K		X	1	1	1	0	0	0	1	71	X	0	0	1	1	1	1	1	1F
L		X	1	1	1	1	0	0	1	79	X	1	1	1	1	1	1	0	7E
M		X	1	0	1	1	0	0	1	59	X	1	1	0	1	1	0	1	59
N		X	1	0	1	1	0	0	1	59	X	0	1	1	1	1	0	1	39
O		X	1	1	1	1	0	0	0	78	X	1	1	1	1	1	0	0	78
P		X	1	1	0	1	1	1	0	6E	X	1	1	0	0	1	0	1	65
Q		X	1	1	1	1	1	0	0	78	X	0	1	1	1	1	0	0	38
R		X	1	1	1	1	0	0	0	70	X	0	1	1	1	0	1	0	35
S		X	1	1	1	0	1	0	0	74	X	1	1	1	0	0	1	0	72
T		X	1	1	0	1	1	1	0	6E	X	1	1	1	1	1	1	1	6F
U		X	1	1	1	1	1	0	1	79	X	1	1	1	1	1	0	0	78
V		X	1	0	1	1	1	1	1	5F	X	0	1	1	1	1	0	1	39
W		X	0	1	1	1	1	0	1	39	X	0	1	1	1	1	0	1	39
X		X	0	0	1	1	1	1	1	1F	X	0	0	1	1	1	1	1	1F
Y		X	1	0	1	1	1	1	1	5F	X	1	0	0	1	1	1	1	4F
Z		X	0	1	1	1	1	1	0	3E	X	1	0	1	1	1	1	0	5E
+		X	1	1	0	0	1	1	1	67	X	1	1	0	0	1	1	1	67
−		X	1	1	1	0	1	1	1	77	X	1	1	1	0	1	1	1	77
7		X	1	1	1	1	1	1	0	7E	X	1	1	0	0	1	0	1	65
Ø		X	0	1	1	1	1	0	0	38	X	1	1	0	1	1	0	0	58
1		X	1	1	0	1	1	1	1	6F	X	1	1	1	0	1	1	1	6F
2		X	1	1	1	1	0	0	1	72	X	1	1	1	0	1	1	0	74
3		X	1	1	1	1	1	1	0	7E	X	1	1	1	0	1	1	0	52
4		X	1	1	0	0	1	1	1	65	X	1	1	1	0	1	1	1	67
5		X	1	1	1	0	1	1	0	74	X	1	1	1	1	0	0	1	70
6		X	1	1	1	1	0	0	0	70	X	1	1	1	1	0	0	1	70
7		X	1	1	1	1	1	1	0	7E	X	1	1	1	1	1	0	0	79
8		X	1	1	1	1	0	0	0	70	X	1	1	1	1	0	0	0	70
9		X	1	1	1	1	0	1	0	74	X	1	1	1	1	0	0	0	70
∂		X	0	1	1	1	1	1	0	3E	X	1	1	1	1	0	0	0	70
b		X	1	1	1	1	0	0	0	71	X	0	1	1	1	1	1	0	3E
C		X	1	1	1	1	0	1	1	73	X	1	1	1	1	0	1	0	76
d		X	0	1	1	1	1	1	0	3E	X	1	1	1	1	0	0	0	70
E		X	1	0	1	1	0	0	1	51	X	1	1	1	1	0	1	0	7A
F		X	1	1	1	0	1	1	1	6E	X	1	1	1	0	0	1	1	67
g		X	1	1	0	1	1	1	0	5E	X	1	1	1	1	0	0	0	70
h		X	1	1	1	0	1	0	1	71	X	1	1	1	1	0	0	1	73
I		X	1	1	1	1	1	1	1	7F	X	1	1	1	0	1	1	1	6F
J		X	1	1	1	1	1	0	1	7B	X	1	1	1	1	1	0	0	78
K		X	1	1	1	0	1	1	1	6F	X	0	0	0	1	1	1	1	0F
l		X	1	1	0	1	1	1	1	6F	X	1	1	0	1	1	1	1	6F
m		X	1	1	1	0	0	1	1	73	X	1	1	0	0	0	1	1	63
n		X	1	1	1	1	1	1	1	7F	X	1	1	0	0	0	1	1	63
o		X	1	1	1	1	0	0	1	73	X	1	1	1	0	0	1	0	72
P		X	1	1	1	1	0	0	0	70	X	1	0	1	1	1	1	1	5F
q		X	1	0	1	1	1	1	0	5E	X	1	1	1	0	0	0	1	71
r		X	1	1	1	1	1	1	1	7F	X	1	1	1	0	0	1	1	67
S		X	1	1	1	1	1	1	1	7F	X	0	1	1	0	1	1	0	36
T		X	1	1	1	0	1	1	0	6E	X	1	1	1	0	1	1	1	6F
U		X	1	1	1	1	1	0	1	7B	X	1	1	1	1	0	1	0	7A
V		X	1	1	1	1	1	1	1	7F	X	0	1	1	1	0	1	1	3B
W		X	0	1	1	1	1	0	1	3B	X	0	1	1	1	0	1	1	3B
X		X	0	0	1	1	1	1	1	1F	X	0	0	1	1	1	1	1	1F
Y		X	1	1	1	1	0	1	0	7B	X	1	1	1	1	0	0	0	70
Z		X	0	1	1	1	0	1	0	3B	X	1	0	1	1	0	1	0	56
TEST		X	0	0	0	0	0	0	0	00	X	0	0	0	0	0	0	0	00

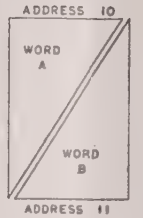

SEE ALPHA NUMERIC DIAGRAM FOR SEGMENT DETAILS

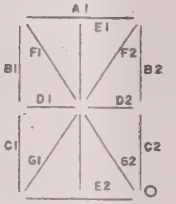

DISPLAY A

1785R

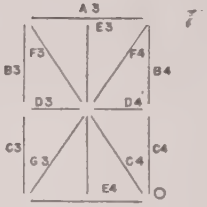

DISPLAY B

QTY.	QTY.	QTY.	QTY.	ITEM NO.	PART OR IDENTIFYING NO.	DESCRIPTION OR NOMENCLATURE	MATERIAL	SPEC OR NOTE
						LIST OF MATERIAL OR PARTS LIST		

ALL THREADS UNIFIED SERIES, EXTERNAL THREADS TO BE CLASS 2A, INTERNAL THREADS TO BE CLASS 2B AFTER FINISH, UNLESS OTHERWISE SPECIFIED

63 FINISH ON ALL MACHINED SURFACES UNLESS OTHERWISE SPECIFIED. REMOVE ALL BURRS AND SHARP EDGES UNLESS OTHERWISE SPECIFIED

DO NOT SCALE DWG.

DIMENSIONS ARE IN INCHES AND INCLUDE FINISH THICKNESS UNLESS OTHERWISE SPECIFIED

TOLERANCE UNLESS SPECIFIED		
BASIC	TWO PLACE	THREE PLACE
UP TO 6	± .02	±
6 TO 24	± .03	±
ABOVE 24	± .06	±
ANGULAR DIMENSION	±	

FINISH

Sierra
A DIVISION OF LEAR SIEGLER, INC.
MENLO PARK, CALIFORNIA 94025

CODE IDENT. NO. 54778

A5 /A6

ASSY OR ITEM	QTY NEXT	NEXT ASSY	MODEL NO.
		APPLICATION	

5578

DATE	SIZE	DRAWING NO.	REV.
BY D BRUCE	D	D03333400	
CHECKED			
APPR	SCALE	STOCK AS	SHEET

THIS DRAWING AND SPECIFICATIONS SHOWN SHALL NOT BE COPIED OR USED WITHOUT WRITTEN CONSENT OF LEAR SIEGLER, INC., SIERRA ELECTRONIC DIVISION

ZONE	LTR	REVISIONS DESCRIPTION	DATE	APPROVED
		SEE LAT -		

KEY PANEL			SWITCH NO.	(R.C.) Y.X	CHIP OUTPUT (HEX)	A5 BOARD OUTPUT DATA (HEX)
RECEIVE PORT A		DIAL	1	1.1	00 U34	20
		HOLD	2	2.1	04	24
FUNCTION		LEV/FREQ	3	1.2	01	21
		NOISE	4	1.3	02	22
		NOISE TONE	5	1.4	03	23
		P/AR	6	2.2	05	25
	ENV DELAY DIST	MEAS	7	2.3	06	26
		REPEAT	8	2.4	07	27
		PHASE JITT	9	3.1	08	28
		INTER MOD	10	3.2	09	29
		IMPULSE COUNT	11	3.3	0A	2A
		SET REMOTE	12	4.1	0C	2C
		REMOTE CONTROL	13	4.2	0D	2D
		SELF TEST	14	4.3	0E	2E
		SET REF DISP STP CANCEL	15	5.1	10	30
TRMTR CONTRL		SWP HLD/STP IM CHK	16	5.2	11	31
		MEAS	17	5.3	12	32
DISPLAY		REMOTE RCV/TRMT	18	5.4	13	33
		RAUD RATE	19	4.4	0F U34	2F
		+ COND	20	3.4	08 U33	28
MODE		AUTO S/N DIST	21	1.1	00 U32	40
		MAN N/TONE RESP	22	2.1	04	44
ENTRY	1	1004 C-MSG	23	3.1	08	48
	2	SLOPE 3-KHz	24	5.1	10	50
	3	SWP A N/G	25	5.2	11	51
	4	SWP B PROG	26	5.3	12	52
	5	SWP C 15 KHz	27	4.1	0C	4C
	6	TONE	28	4.2	0D	4D
	7	STD STD	29	4.3	0E	4E
	8	STD-LF CH LTD	30	3.2	09	49
	9		31	3.3	0A	4A
	■	VOL UP	32	3.4	0B	4B
	0	VOL DOWN	33	2.2	05	45
	#	END	34	2.3	06	46
			35	2.4	07	47
IMPD RCVR PORT		900Ω (600Ω)	36	1.2	01	41
		BRDG (TERM)	37	1.3	02	42
		A TRMT SWAP	38	1.4	03	43
TRANSMIT PORT B		DIAL	39	4.4	0F	4F
		HOLD	40	5.4	13 U35	53

KEY PANEL & DISPLAY STATUS				LED NO.	ADDRESS (HEX)	DATA 07 6 5 4 3 2 1 00
SEQUENCER	TRANSMIT	LEV	dBm	57	10	OXXXXXXX
		FREQ	Hz	58	12	OXX
		SWP	MODE	61	14	OXX
		DISP	MODE	63	16	OXX
		COND FILTER	0-9	58	11	OXX
		NOISE FILTER	1-5	60	13	OXX
		NOISE DISP	MODE	62	15	OXX
		UNIT FILTER	7,8	64	17	OXX
	IMPULSE MEASUREMENTS	IMPULSE	THRLD dBm	24	00	XXO
		NOISE	MID/HI	35	00	XOX
		RATE	7,8	46	00	OXX
		GAIN HIT	dB	26	02	XXO
		PHASE HIT	DEG	48	02	OXX
		TIME	MIN	25	01	XXO
				36	01	XOX
		REMOTE	SETTING	47	01	OXX
	RECEIVE PORT A	DIAL		37	02	XOX
		HOLD		27	03	XXO
	IMPD RCVR	900Ω	(600Ω)	28	04	XXO
		BRDG	(TERM)	39	04	XOX
		A TRMT	PORT SWAP	50	04	OXX
	TRANSMIT PORT B	DIAL		40	05	XOX
		HOLD		51	05	OXX
	STATUS	CKT LOSS		34	0A	XXO
		FREQ RESP		45	0A	XOX
		ATTN DIST		56	0A	OXX
		NOISE		55	09	OXX
		NOISE/GND		43	08	XOX
		S/N		54	08	OXX
		NOISE/TONE		33	09	XXO
		P/AR		44	09	XOX
		PHASE JITT		53	07	OXX
	ENV DELAY DIST	REFERENCE	RTRN	32	08	XXO
			FRWD	31	07	XXO
		REPEAT		42	07	XOX
	INTERMOD	4-TONE CHK		29	05	XXO
				30	06	XXO
		IMPULSE		41	06	XOX
		REMOTE CONTROL		52	06	OXX
		1004 TONE		6	19	OXX
		IM CHECK		7	1A	OXX
		SEQ LOSS		8	1B	OXX
		PWR RESET		9	1C	OXX
		MEASURMENT IN PROGRESS		10	1D	OXX
		TRANSMIT DISPLAY		5	1B	OXX
		REMOTE		11	1E	OXXXXXXX
		POWER		12		
		NOT USED		38		
		NOT USED		49		

QTY	QTY	QTY	QTY	ITEM NO	PART OR IDENTIFYING NO.	DESCRIPTION OR NOMENCLATURE	MATERIAL	SPEC OR NOTE
						LIST OF MATERIAL OR PARTS LIST		

ALL THREADS UNIFIED SERIES EXTERNAL THREADS TO BE CLASS 2A INTERNAL THREADS TO BE CLASS 2B AFTER FINISH UNLESS OTHERWISE SPECIFIED

63 √ FINISH ON ALL MACHINED SURFACES UNLESS OTHERWISE SPECIFIED

REMOVE ALL BURRS AND SHARP EDGES UNLESS OTHERWISE SPECIFIED

DO NOT SCALE DWG.

DIMENSIONS ARE IN INCHES AND INCLUDE FINISH THICKNESS UNLESS OTHERWISE SPECIFIED

TOLERANCE UNLESS SPECIFIED		
BASIC	TWO PLACE	THREE PLACE
UP TO 6	± .02	±
6 TO 24	± .01	±
ABOVE 24	± .06	±
ANGULAR DIMENSION	±	

FINISH

Sierra
A DIVISION OF LEAR SIEGLER INC
MENLO PARK CALIFORNIA 94025

CODE IDENT NO 54778

A5/A6

ASSY OR ITEM	QTY NEXT	NEXT ASSY	MODEL NO
		APPLICATION	

DATE	SIZE	DRAWING NO	REV.
BY	D	DC3333400	D2
CHECKED	SCALE	STOCK AS	SHEET 1 OF 1
APPD			

DWG NO DC3333400

THIS DRAWING AND SPECIFICATIONS SHOWN SHALL NOT BE COPIED OR USED WITHOUT WRITTEN CONSENT OF LEAR SIEGLER, INC., SIERRA ELECTRONIC DIVISION.

REVISIONS			
ZONE	LTR	DESCRIPTION	DATE	APPROVED
		1		

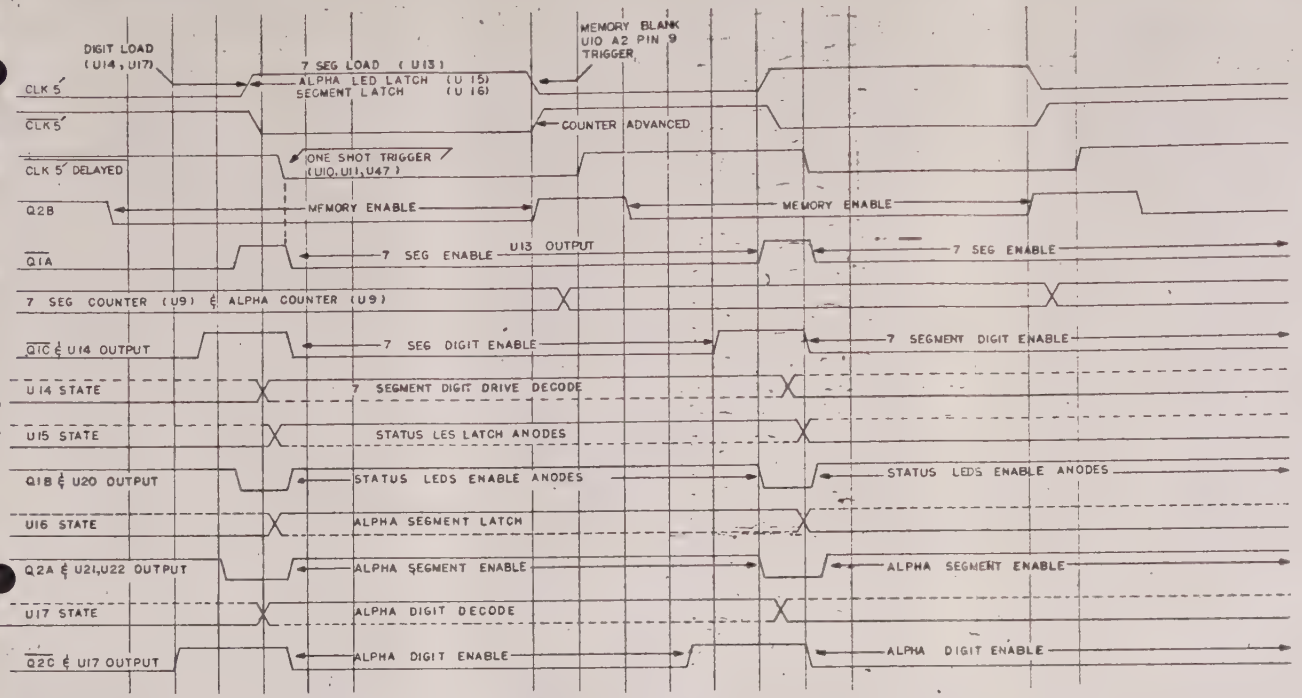

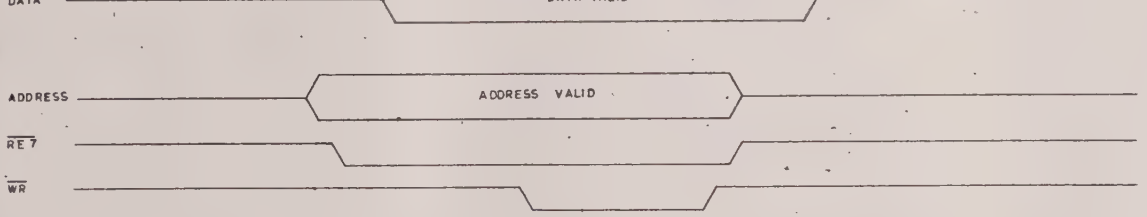

QTY	QTY	QTY	QTY	ITEM NO	PART OR IDENT. NO.	DESCRIPTION OR NOMENCLATURE	MATERIAL	SPEC OR NOTE
						LIST OF MATERIAL OR PARTS LIST		

ALL THREADS UNIFIED SERIES, EXTERNAL THREADS TO BE CLASS 2A, INTERNAL THREADS TO BE CLASS 2B AFTER FINISH, UNLESS OTHERWISE SPECIFIED.

63 RMS ON ALL MACHINED SURFACES UNLESS OTHERWISE SPECIFIED.

REMOVE ALL BURRS AND SHARP EDGES UNLESS OTHERWISE SPECIFIED.

-DO NOT SCALE DWG.

DIMENSIONS ARE IN INCHES AND INCLUDE FINISH THICKNESS UNLESS OTHERWISE SPECIFIED.

TOLERANCE UNLESS SPECIFIED		
BASIC	TWO PLACE	THREE PLACE
UP TO 6	± .02	±
6 TO 24	± .03	±
ABOVE 24	± .06	±
ANGULAR DIMENSION ±		

FINISH

Sierra
A DIVISION OF LEAR SIEGLER INC
MENLO PARK, CALIFORNIA 94025

CODE IDENT. NO 54778

DISPLAY CONTROL TIMING

ASSY. OR ITEM	QTY NEXT	NEXT ASSY.	MODEL NO.
			859A

APPLICATION

DATE	SIZE	DRAWING NO.	REV.
7/23/73	D	D0333400	1
BY D. BRUCE			
CHECKED			
APPR	SCALE	STOCK AS	SHEET 4

D0333400

REVISIONS

SYM	DESCRIPTION	DATE	APPROVED
A	PILOT RUN RELEASE		
A4	PCO 3035, 3066, 3084, 3104	5/15/80	
B	PILOT RUN RELEASE PER DCO 127	6/5/80	
B4	DCO 130, 162, 172, 184	8/28/80	
B5	DCO 301, 301A	1-8-81	
B6	DCO 390	1-8-81	
C	DCO 407	1-27-81	
	PRODUCTION RELEASE PER DCO 474	2-25-81	
D	ECO 17741	4-16-81	
D	ADD 809A-R USAGE PER ECO 17924 (TYPE 1)	11-9-81	
D1	DELETE 809A-R USAGE PER ECO 18067	2-5-82	

NEXT ASSY	QTY	MODEL NO
D03354500	1	809A

Sierra

LEAR SIEGLER, INC.
SIERRA ELECTRONIC DIVISION
MENLO PARK, CALIFORNIA 94025

CODE IDENT. NO. 54778

A5 PWB L/M

DATE	SIZE	DRAWING NO.	REV
4-1-80	A	A03333000	D1

BY R. SAKODA

APPV'D

STOCK AS

SHEET 1 OF 2

671-14-1

			1	29	907304992	RESISTOR, 49.9K, 1/8W, 1%	R31
			1	28	907304993	499K, 1/8W, 1%	R30
			1	27	907302001	RESISTOR, 2.00K, 1/8W, 1%	R20
			1	26	907303011	3.01K, 1/8W, 1%	R27
			1	26	907303092	30.9K, 1/8W, 1%	R26
			3	25	907304122	41.2K, 1/8W, 1%	R18,19,20
			6	24	906900104	100K, 1/4W, 5%	R7,12,29,23-25
				23			
			4	22	906900100	10Ω, 1/4W, 5%	R14, R15,
				22			R16, R17
			1	21	906900681	680Ω, 1/4W, 5%	R13
			1	20	907306342	63.4K, 1/8W, 1%	R11
			1	19	907307682	76.8K, 1/8W, 1%	R10
			1	18	907305111	5.11K, 1/8W, 1%	R8
			4	17	906900103	10K, 1/4W, 5%	R4,22,32
			3	16	907307872	78.7K, 1/8W, 1%	R1, R2, R3
			2	15	906900201	200Ω, 1/4W, 5%	R5,R21
			1	14	907308062	RESISTOR 80.6K, 1/8W, 1%	R5
			1	13	902710225	CAPACITOR, 2.2 μFd. TANT	C53
			19	12	901340103	CAPACITOR, .01μF, 50V, DISC, CER.	C21, C22
				12		C23, C24, C25, C26, C27	C28, C29,
				12		C30, C31, C32, C33, C34	C35, C39,
				12		C36, C37, C38,	
			1	11	901320102	.001μF, 200V, DISC, CER.	C18
			2	10	901320474	.47μF, 100V, 20%	C16, C17
			4	9	902710157	150μF, 10V, TANT	C8, C11, C12,
				9			C14
			6	8	901930102	.001μF, 2%, MICA	C5, C6, C7,
				8			C15, C19, C20
			13	7	901300104	0.1μF, 50V, 20%	C3, C4, C9,
				7		C40, C41, C42, C43, C46, C47, C50, C51	C10, C13
			2	6	902710227	CAPACITOR, 220μF, 30V, TANT	C1, C2
			4	5	901120104	CAPACITOR, .1μF, 1%, 100V	C48, C49, C44, C45
				4			
			REF	3	D03333400	A5/A6 SCHEMATIC	
			1	2	904500711	A5 PWB D03333200	
			REF	1	D03333100	A5 PWB ASSY	
QTY	QTY	QTY	QTY	ITEM	PART NO.	DESCRIPTION	REF.

LIST OF MATERIAL

A5 PWB ASSY L/M	ISI Sierra	SIZE A	DRAWING NO. A03333000
	CODE IDENT NO. 04720	SCALE	SHEET 2 OF 4

BISHOP GRAPHICS/ACCUPRESS
REORDER NO. A-0480

				59			
			16	58	910303906	TRANSISTOR. 2N3906	Q1, Q2, Q3
				58		Q4, Q5, Q6, Q7, Q8, Q9,	Q10, Q11,
				58		Q12, Q13, Q14, Q15, Q16	
				57			
				56			
				55			
			1	54	920274373	I.C. 74C373	U36
			2	53	920300339	LM339	U58,U61
			3	52	920207474	74C74	U60,U54
				51			U55
			2	50	920274374	74C374	U14,U28
			2	49	920302803	ULN-2803A	U1,U56
			3	48	920307432	74LS32	U7,U13
				48			U53
			1	47	920204069	4069	U21
			2	46	920204001	4001, QUAD INPUT	U39,U57
			2	45	920274923	74C923 KEY ENCODER	U24,U25
			3	44	920307408	74LS08	U16,U17
				44			U18
			1	43	920303467	3467	U49
			9	42	920327400	74LS00	U3,U4
				42		U9,U10,U22,U23,U26,U27,	U50
			1	41	920204011	4011	U52
			1	40	920327404	74LS04	U40
			1	39	920204543	4543, SEVEN SEQ. DECODER	U8
			1	38	920204042	4042, QUAD LATCH	U46
			2	37	920204514	4514, 4 TO 16 DECODER	U29,U15
			3	36	920204013	4013, FLIP FLOP	U32,U35
				35			U59
			3	34	920314123	74LS123	U43,U44
				34			U45
			1	33	920204520	4520, DUAL BDC COUNTER	U51
			2	32	920208097	80C97, BUFFER	U47,U48
			2	31	920208095	80C95, BUFFER	U41,U42
			4	30	920305561	I.C. L5561, RAM	U30,U31
				30			U33,U34
QTY	QTY	QTY	QTY	ITEM	PART NO.	DESCRIPTION	REF.

LIST OF MATERIAL

A5 PWB ASSY L/M

LSI Elcrra

CODE IDENT NO. 64773

SIZE A | DRAWING NO. A0333000

SCALE

SHEET 3 OF 4

BISHOP GRAPHICS/ACCUPRESS
REORDER NO A-0440

QTY	QTY	QTY	QTY	ITEM	PART NO.	DESCRIPTION	REF.
				86			
				85			
				84			
			2	83	920600510	RESISTOR PACK, 51Ω, 1/4 W, 2%	RP7, RP10
			2	82	920600102	1K, 1/4W, 2%	RP5, RP8
			1	81	920600821	820Ω, 1/4W, 2%	RP2
			5	80	920610103	10K, 1/4W, 2%	RP1, RP4
				79		RP6	RP9, RP11
			2	78	920620222	RESISTOR PACK, 2.2K, 1/4W, 2%	RP3, RP12
				77			
				76			
				75			
			39	74	915800065	SPACER, LED .188 H	
				73			
				72			
				71			
			1	70	914800355	CONNECTOR, RIGHT ANGLE CONNECTOR 18 PIN	J4
			1	69	916400112	A4/A5 INTERFACE CABLE	J3
				68			
				67			
				66			
				65			
			39	64	910504650	LED DISPLAY DIFFUSED T 1 3/4	DS24, DS25
				64		DS26, DS27, DS28, DS29, DS30, DS31, DS32,	
				64		DS33, DS34, DS35, DS36, DS37, DS39, DS40	
				64		DS41, DS42, DS43, DS44, DS45, DS46, DS47,	
				64		DS48, DS50, DS51, DS52, DS53, DS54, DS55	
				64		DS56, DS57, DS58, DS59, DS60, DS61, DS62,	
				64		DS63, DS64	
				63			
			8	62	910504148	DIODE IN4148 CR23	CR1-CR7
				61			
			16	60	910300005	TRANSISTOR, MPS-U05	Q28, Q29
				60		Q30, Q31, Q32, Q33, Q34, Q35, Q36	
				60		Q37, Q38, Q39, Q40, Q41	Q42, Q43

LIST OF MATERIAL

A5 PWB ASSY L/M

(ISI) Sierra

CODE IDENT NO. 54770

SIZE A

DRAWING NO. A03333000

SCALE

SHEET 4 OF 4

BISHOP GRAPHICS/ACCUPRESS REORDER NO. A-0460

REVISIONS

SYM	DESCRIPTION	DATE	APPROVED
A	PILOT RUN RELEASE	3/7/80	
A	PILOT RUN RELEASE PER DCO 123	6/3/80	
A1	DCO 132	8/28/80	
B	DCO 431	1-27-81	
	PRODUCTION RELEASE PER DCO 474	2-25-81	
B	ADD 809A-R PER ECO 17924 (TYPE 1)	11-9-81	
B1	ECO 18041	3-5-82	
B2	ECO 18128	5.10.82	

LSi Sierra

LEAR SIEGLER, INC.
SIERRA ELECTRONIC DIVISION
MENLO PARK, CALIFORNIA 94025

CODE IDENT. NO. 54778

A6 PWB ASSY P/L

NEXT ASSY.	QTY	MODEL NO.
03354500	1	809 B
03354500	1	809 BR
03354500	1	809A

DATE 7/13/79
BY T Chavez
APPV'D P.D.

SIZE A | DRAWING NO. A03333500 | REV B2

STOCK AS

SHEET 1 OF 2

A71-1A-1

QTY	QTY	QTY	QTY	ITEM	PART NO.	DESCRIPTION	REF.
			2	28	920302803	I.C., 2803 DRIVER ARRAY	U5, U6
			4	27	920303467	I.C., 3467 CORE DRIVER	U1, U2
				27			U3, U7
				26			
				25			
				24			
				23			
			1	22	913800085	LED DISPLAY UNIVERSAL OVERFLOW	DS18
			10	21	913800086	LED DISPLAY 7SEGMENT HDSP3403	DS13, DS14
				21		DS15, DS16, DS17, DS19, DS20, DS21, DS22, DS23	
			8	20	910504684	LED DIODE	DS5, DS6
				20		DS7, DS8, DS9, DS10, DS11, DS12	
			4	19	913800087	ALPHA-NUMERIC DISPLAY 3785R	DS1, DS2
				19			DS3, DS4
				18			
				17			
				16			
				15			
			4	14	902710157	CAPACITOR, 150UF, 20%, 10V, TANT	C1, C2
				14			C3, C4
				13			
				12			
				11			
				10			
			7	9	906900120	RESISTOR, 12Ω, 1/4W, 5%	R10, R11
				9		R12, R13, R14, R15, R16	
			8	8	906900100	RESISTOR, 10Ω, 1/4W, 5%	R2, R3,
				8		R4, R5, R6, R7, R8, R9	
			1	7	906900201	RESISTOR, 200Ω, 1/4W, 5%	R1
				6			
				5			
				4			
			REF	3	D03405600	A5/A6 PWB SCHEMATIC	
			1	2	904500712	A6 PWB D03333700	
			REF	1	D03333600	A6 PWB ASSY	

LIST OF MATERIAL

A6 PWB ASSY P/L	Sierra	SIZE A	DRAWING NO. A03333500
	CODE IDENT NO. 54778	SCALE	SHEET 2 OF 2

BISHOP GRAPHICS/ACCUPRESS

THIS DRAWING AND SPECIFICATIONS SHOWN SHALL NOT BE COPIED OR USED WITHOUT WRITTEN CONSENT OF LEAR SIEGLER, INC., SIERRA ELECTRONIC DIVISION

REVISIONS				
ZONE	LTR	DESCRIPTION	DATE	APPROVED
	A			

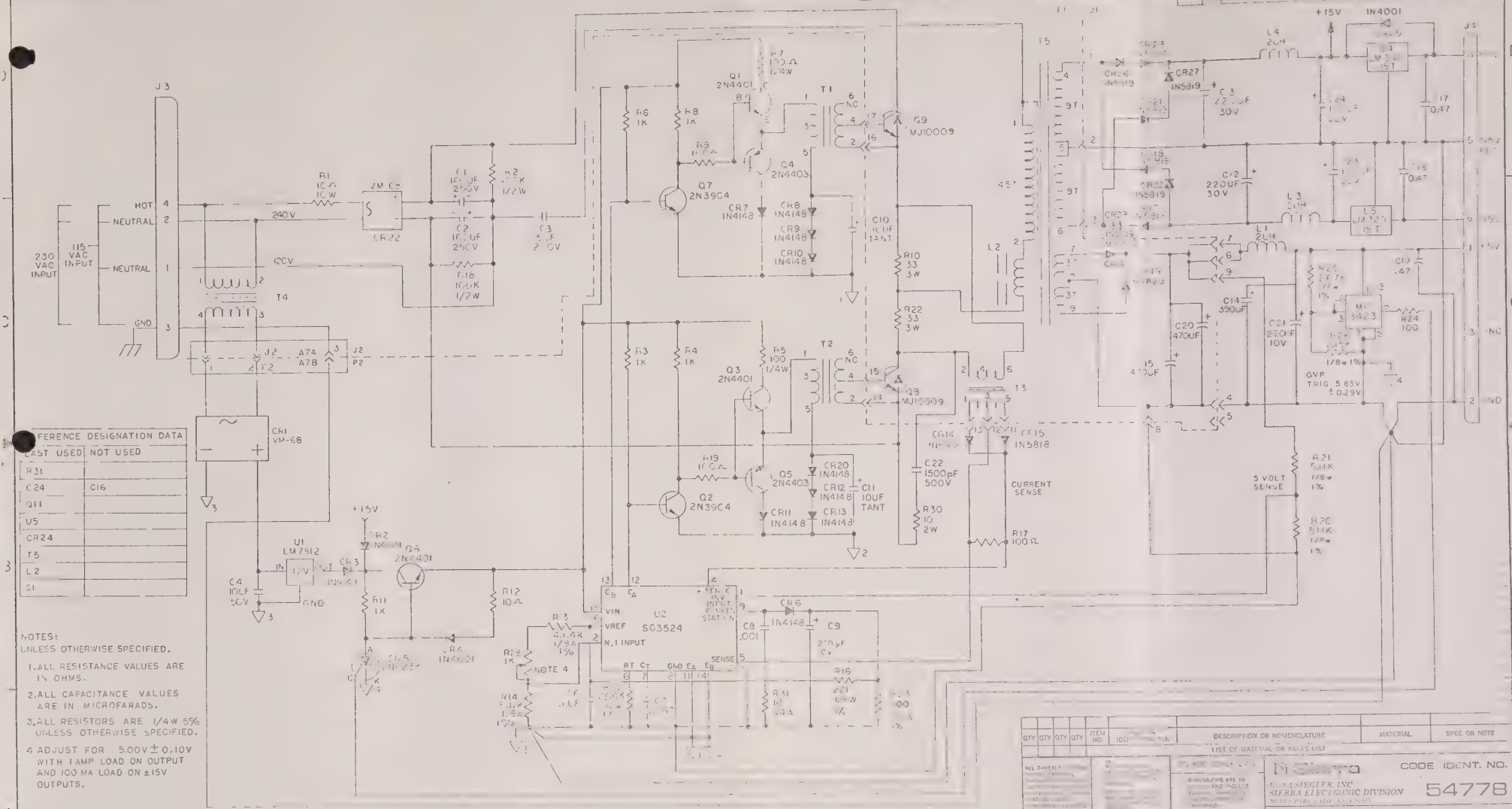

REFERENCE DESIGNATION DATA	
LAST USED	NOT USED
R31	
C24	C16
Q11	
U5	
CR24	
T5	
L2	
S1	

NOTES:
UNLESS OTHERWISE SPECIFIED.

1. ALL RESISTANCE VALUES ARE IN OHMS.
2. ALL CAPACITANCE VALUES ARE IN MICROFARADS.
3. ALL RESISTORS ARE 1/4W 5% UNLESS OTHERWISE SPECIFIED.
4. ADJUST FOR 5.00V ± 0.10V WITH 1 AMP LOAD ON OUTPUT AND 100 MA LOAD ON ±15V OUTPUTS.

QTY	QTY	QTY	QTY	ITEM NO.	IDENT NO.	DESCRIPTION OR NOMENCLATURE	MATERIAL	SPEC OR NOTE

LIST OF MATERIAL OR PARTS LIST

ALL THREADS

DIMENSIONS ARE IN AND INCLUDE

LEAR SIEGLER, INC
SIERRA ELECTRONIC DIVISION

CODE IDENT. NO. 54778

A7A/A7B
POWER SUPPLY

SIZE D | DRAWING NO D03330900 | REV B1

STOCK AS | SHEET 1 OF 1

NEXT ASSY. | APPLICATION | FINISH

D03330900

REVISIONS

SYM	DESCRIPTION	DATE	APPROVED
A	PILOT RUN RELEASE	3/7/80	
A3	PCO 3025, 3063, 3064, 3154	5/19/80	
B	PILOT RUN RELEASE PER DCO 123	6/3/80	
B1	DCO 129	6/20/80	
B2	DCO 385	1-8-81	
C	PRODUCTION RELEASE PER DCO 474	2-25-81	
C_1	PER ECO 18128 KW	5-11-82	PH
C_2	PER ECO 18165 KW	5-11-82	PH

LSi Sierra

LEAR SIEGLER, INC.
SIERRA ELECTRONIC DIVISION
MENLO PARK, CALIFORNIA 94025

CODE IDENT. NO. 54778

A7A PWB ASSY L/M

NEXT ASSY.	QTY	MODEL NO.
D03345100	1	809B
D03345102	1	809A

DATE 2/27/79
BY T. Chavez
APPV'D P.D.

SIZE A

DRAWING NO. A03330100

REV C_2

STOCK AS

SHEET 1 OF 3

671-14-1

QTY	QTY	QTY	QTY	ITEM	PART NO.	DESCRIPTION	REF.
			1	37	909000203	INDUCTOR, 7.84 UH (A03342200)	L2
				36			
				35			
				34			
			1	33	914800343	CONNECTOR WAFER, 4 PIN	J3
				32			
				31			
				30			
				29			
			1	28	909900052	TRANSFORMER (A03342000)	T5
			1	27	910000139	TRANSFORMER (A03337500)	T4
			1	26	909300013	TRANSFORMER, PULSE	T3
				25			
			2	24	910800820	DIODE	CR16, CR19
			1	23	C03351200	HEATSINK	
			2	22	910310009	TRANSISTOR, MJ10009	Q8, Q9
				21			
				20			
				19			
			1	18	910800068	DIODE, VM68 BRIDGE	CR22
				17			
				16			
			1	15	901900152	CAPACITOR, 1500 PF, 500V, 5%	C22
			2	14	902200477	CAPACITOR, 470 UF, 12V	C15, C20
			1	13	901100505	CAPACITOR, 5 UF, 2%, 200V	C3
			2	12	902230157	CAPACITOR, 160 UF, 250V	C1, C2
				11			
				10			
			1	9	905800100	RESISTOR, 10Ω, 2W, 5%, COMP	R30
			2	8	90620R330	RESISTOR, .33Ω, 3W, 1%	R10, R22
			2	7	905000104	RESISTOR, 100K, 1/2W, 5%	R2, R18
			1	6	906400100	RESISTOR, 10Ω, 10W, 5%	R1
				5			
				4			
			REF	3	D03330900	A7A/A7B PWB SCHEMATIC	
			1	2	904500713	A7A PWB C03330300	
			REF	1	D03330200	A7A PWB ASSY	

LIST OF MATERIAL

A7A PWB ASSY L/M

Sierra

CODE IDENT NO. 54778

SIZE A

DRAWING NO. A03330100

SCALE

SHEET 2 OF 3

BISHOP GRAPHICS/ACCUPRESS

QTY	QTY	QTY	QTY	ITEM	PART NO.	DESCRIPTION	REF.
			20	50	921200190	CONTACT	P1, J2
				49			
			4	48	819204021	WASHER, LOCK, #6	
				47			
				46			
			4	45	800004162	SCREW, 6-32 X 3/8	
				44			
				43			
			2	42	921300018	HEATSINK, TO-3 CASE	
				41			
				40			
				39			
			4	38	915100170	THERMAFILM INSULATOR	

LIST OF MATERIAL

A7A PWB ASSY L/M

Sierra

CODE IDENT NO. 54778

SIZE A

DRAWING NO. A03330100

SCALE

SHEET 3 OF 3

BISHOP GRAPHICS/ACCUPRESS
REORDER NO. A-0480

REVISIONS

SYM	DESCRIPTION	DATE	APPROVED
A	PILOT RUN RELEASE	3/7/80	
A3	PCO 3057, 3138	5/20/80	
B	PILOT RUN RELEASE PER DCO 123	6/3/80	
B1	DCO 129	6/20/80	
B2	DCO 178	8/28/80	
B3	DCO 385	1-8-81	
C	PRODUCTION RELEASE PER DCO 474	2-25-81	
C_1	PER ECO 18128 KW	5-11-82	PH
C_2	PER ECO 18165 KW	5-11-82	PH

NEXT ASSY.	QTY	MODEL NO.
D03345100	1	809B
D03345100	1	809A

Sierra

LEAR SIEGLER, INC.
SIERRA ELECTRONIC DIVISION
MENLO PARK, CALIFORNIA 94025

CODE IDENT. NO. 54778

A7B PWB ASSY L/M

DATE 2/28/79
BY T. Chavez
APPV'D F.D.

SIZE A

DRAWING NO. A03330500

REV C_2

STOCK AS

SHEET 1 OF 4

671-14-1

QTY	QTY	QTY	QTY	ITEM	PART NO.	DESCRIPTION	REF.
			1	32	901110472	CAPACITOR, .0047UF, 5%, 100V	C7
			1	31	903130104	CAPACITOR, .1 UF, 20%, 50V	C6
				30			
			1	29	902210106	CAPACITOR, 10UF, 50V	C4
				28			
				27			
				26			
			2	25	910805818	DIODE, IN5818	CR14, CR15
			1	24	910306238	DIODE, 2N6238	CR5
				23			
			8	22	910805819	DIODE, IN5819	CR17, CR18
				22			CR21, CR23, CR26-CR29
			10	21	910504148	DIODE, IN4148	CR3
				21			CR6-CR13, CR20
			3	20	910504001	DIODE, IN4001	CR2, CR4, CR25
			1	19	910800068	DIODE, VM68 BRIDGE	CR1
				18			
			1	17	907900290	RESISTOR, 1K POT, 10%, 15T	R28
				16			
			1	15	907302151	RESISTOR, 2.15K, 1/8W, 1%	R26
			1	14	907302671	2.67K, 1/8W, 1%	R25
			1	13	907302000	200Ω, 1/8W, 1%	R23
			1	12	907302210	221Ω, 1/8W, 1%	R16
			1	11	907302001	2.00K, 1/8W, 1%	R15
			3	10	907305111	5.11K, 1/8W, 1%	R14,
				10			R20, R21
			2	9	906900100	10Ω, 1/4W, 5%	R12, 31
			6	8	906900101	100Ω, 1/4W, 5%	R5, R7
				8			R9, R17, R19, R24
			1	7	907304641	4.64K, 1/8W, 1%	R13
			5	6	906900102	RESISTOR, 1K, 1/4W, 5%	R3, R4, R6
				6			R8, R11
				5			
				4			
			REF	3	D03330900	A7A/A7B SCHEMATIC	
			1	2	904500714	A7B PWB C03330700	
			REF	1	D03330600	A7B PWB ASSY	

LIST OF MATERIAL

A7B PWB ASSY L/M

Sierra

CODE IDENT NO. 54778

SIZE A

DRAWING NO. A03330500

SCALE

SHEET 2 OF 4

BISHOP GRAPHICS/ACCUPRESS

QTY	QTY	QTY	QTY	ITEM	PART NO.	DESCRIPTION	REF.
				68			
				67			
			3	66	915100169	PLASTIC FILM INSULATOR	U1, U4, U5
				65			
			5	64	915100074	STANDOFF, 4-40 X .62	
				63			
			1	62	914800330	CONNECTOR WAFER, 3 PIN	P2
			1	61	D03378200	POWER SUPPLY HARNESS	J4
			1	60	914800331	CONNECTOR WAFER, 17 PIN	J1
				59			
				58			
			3	57	909000202	INDUCTOR, 2UH	L1, L3, L4
				56			
				55			
				54			
			2	53	909300013	TRANSFORMER, PULSE	T1, T2
				52			
			1	51	920307915	I.C., LM 320 T-15	U5
			1	50	920327815	I.C., LM 340 T-15	U4
			1	49	920303423	I.C., MC3423	U3
			1	48	920303524	I.C., SG3524	U2
			1	47	920307812	I.C., LM7812	U1
				46			
				45			
				44			
			2	43	910304403	TRANSISTOR, 2N4403	Q4, Q5
			2	42	910303904	TRANSISTOR, 2N3904	Q2, Q7
			3	41	910304401	TRANSISTOR, 2N4401	Q1, Q3
				41			Q6
				40			
			2	39	902740107	CAPACITOR, 100UF, 10%, 20V, TANT	C23, C24
			3	38	901300474	CAPACITOR, .47UF, 50V, CERM	C17, C18, C19
			1	37	902700397	CAPACITOR, 390 UF, 20%, 15V	C14
			2	36	902710227	CAPACITOR, 220 UF, 20%, 30V	C12, C13
			2	35	902720106	CAPACITOR, 10UF, 10%, 20V	C10, C11
			2	34	902700227	CAPACITOR, 220UF, 10%, 10V	C9, C21
			1	33	903100102	CAPACITOR, .001UF, 2%, 100V	C8

LIST OF MATERIAL

A7B PWB ASSY L/M

Sierra

CODE IDENT NO. 54778

SIZE A

DRAWING NO. A03330500

SCALE

SHEET 3 OF 4

BISHOP GRAPHICS/ACCUPRESS
REORDER NO. A-0480

QTY	QTY	QTY	QTY	ITEM	PART NO.	DESCRIPTION	REF.
			2	70	9213000020	HEATSINK-PLASTIC POWER PACKAGE	
				69			

LIST OF MATERIAL

	Sierra	SIZE A	DRAWING NO. A03330500
	CODE IDENT NO. 54778	SCALE ~	SHEET 4 OF 4

BISHOP GRAPHICS/ACCUPRESS

THIS DRAWING AND SPECIFICATIONS SHOWN SHALL NOT BE COPIED OR USED WITHOUT WRITTEN CONSENT OF LEAR SIEGLER, INC., SIERRA ELECTRONIC DIVISION

REVISIONS

ZONE	LTR	DESCRIPTION	DATE	APPROVED
	A	PILOT RUN RELEASE PER DCO 123	[illegible]	[illegible]
		PRODUCTION REL DCO 474	[illegible]	[illegible]

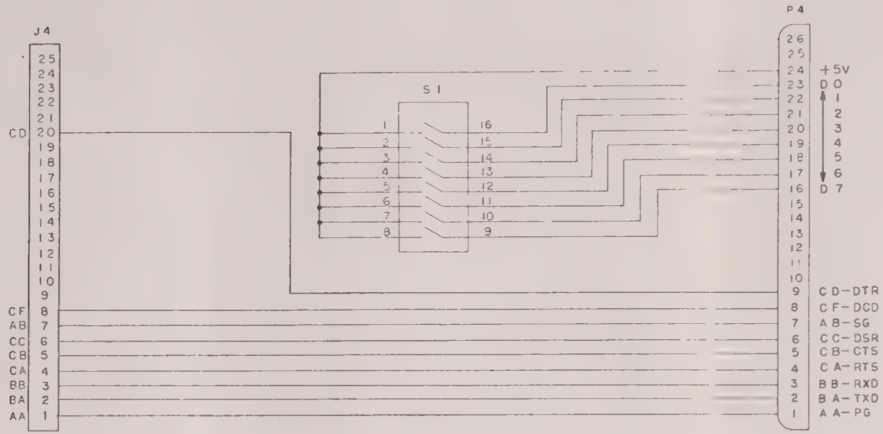

QTY	QTY	QTY	QTY	ITEM NO.	PART OR IDENTIFYING NO.	DESCRIPTION OR NOMENCLATURE	MATERIAL	SPEC OR NOTE

LIST OF MATERIAL OR PARTS LIST

DO NOT SCALE DWG

NEXT ASSY. — APPLICATION

FINISH

Sierra — A LEAR SIEGLER INC — MENLO PARK, CALIFORNIA

CODE IDENT NO. 54778

SIZE D — DRAWING NO. [illegible] — REV

DWG NO. D0339300

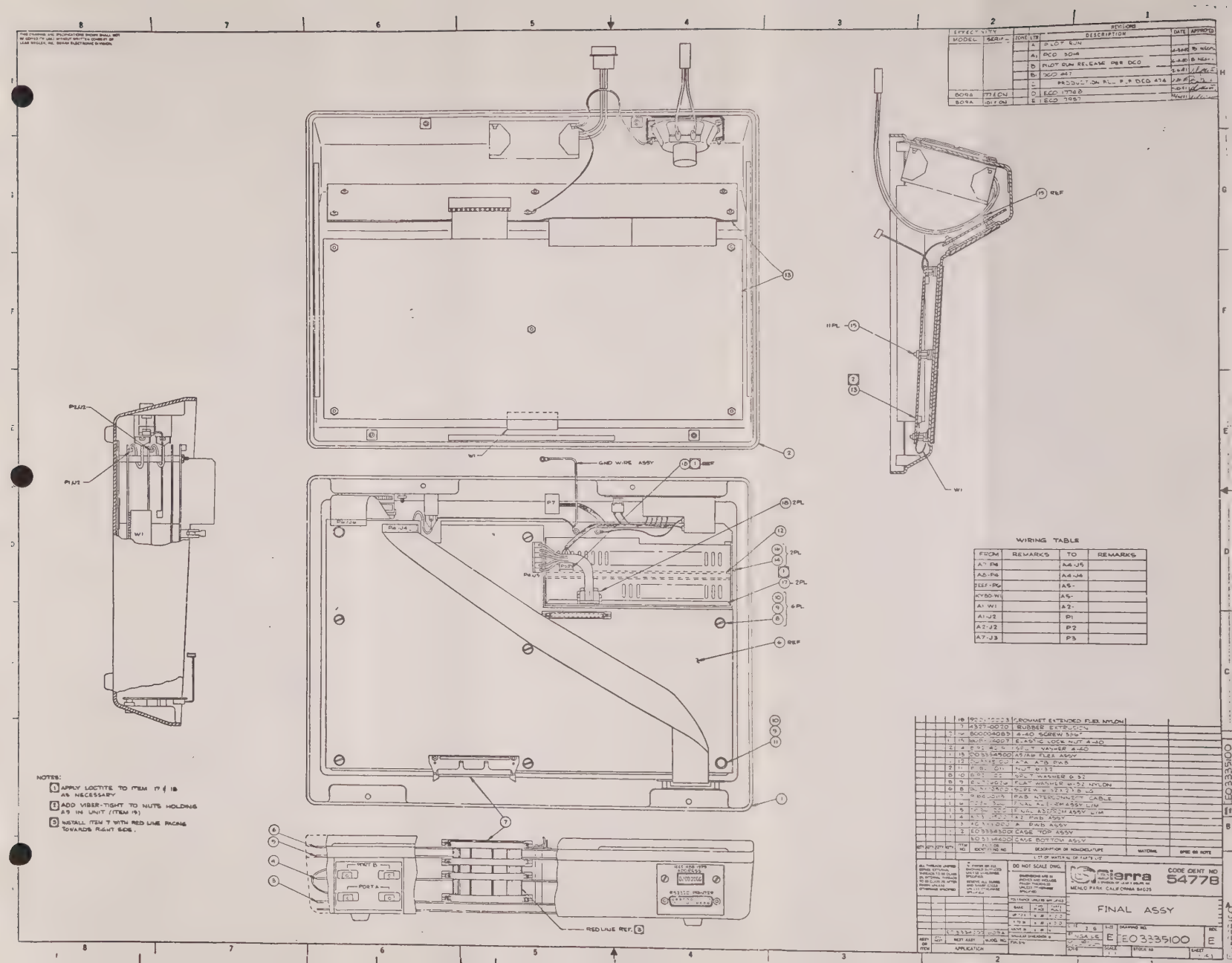

REVISIONS
EFFECTIVITY
MODEL
SERIAL
ZONE
LTR
DESCRIPTION
DATE
APPROVED
A PILOT RUN
A1 PCO 3014
B PILOT RUN RELEASE PER DCO
B1 DCO 447
C PRODUCTION RELEASE PER DCO 474
D ECO 17748
E ECO 7957
809A 77 & ON
809A 101 & ON
GND WIRE ASSY
REF
2PL
6PL
PORT B
PORT A
RED LINE REF. 3
11PL
W1
P1/J2
P2/J2
P3/J3
P4/J4
P5/J5
P7
NOTES:
1 APPLY LOCTITE TO ITEM 17 & 18 AS NECESSARY
2 ADD VIBER-TIGHT TO NUTS HOLDING A9 IN UNIT (ITEM 19)
3 INSTALL ITEM 7 WITH RED LINE FACING TOWARDS RIGHT SIDE.
WIRING TABLE
FROM
REMARKS
TO
REMARKS
A7-P4
A4-J5
A8-P4
A4-J4
JEEP-P6
A5-
KYBD-W1
A5-
A1-W1
A2-
A1-J2
P1
A2-J2
P2
A7-J3
P3
DESCRIPTION OR NOMENCLATURE
MATERIAL
SPEC OR NOTE
LIST OF MATERIAL OR PARTS LIST
DO NOT SCALE DWG.
Sierra
MENLO PARK CALIFORNIA 94025
CODE IDENT NO 54778
FINAL ASSY
E03335100
E
APPLICATION

THIS DRAWING AND SPECIFICATIONS SHOWN SHALL NOT BE COPIED OR USED WITHOUT WRITTEN CONSENT OF LEAR SIEGLER, INC., SIERRA ELECTRONIC DIVISION.

REVISIONS				
ZONE	LTR	DESCRIPTION	DATE	APPROVED
	A	PILOT RUN RELEASE	[illegible]	[illegible]
	A	PILOT RUN RELEASE PER DCO 131	6/[illegible]	[illegible]
	A1	DCO NO. 190	[illegible]	[illegible]
	B	PRODUCTION REL DCO 474	2-25-81	[illegible]
	B	ADD 809A-R PER ECO 17924 (TYPE 1)	11-9-81	[illegible]
	B_1	CHANGE TO 609BR PER ECO 18041	2-10-82	[illegible]
	B_2	PER ECO 18128	4-13-82	PA
	B_3	PER ECO 18132	5-3-82	PH
	C	PER ECO 18179	6/21/82	PN

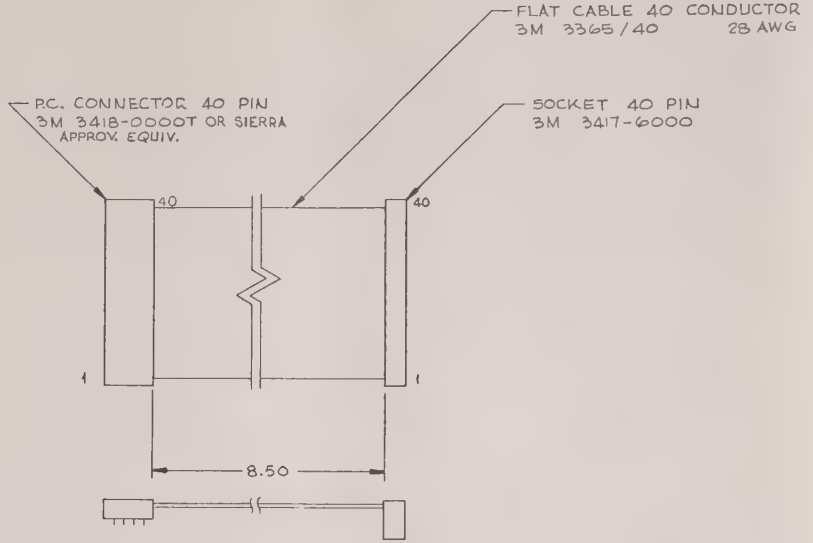

QTY.	QTY.	QTY.	QTY.	ITEM NO.	PART OR IDENTIFYING NO.	DESCRIPTION OR NOMENCLATURE	MATERIAL	SPEC OR NOTE
						LIST OF MATERIAL OR PARTS LIST		
00			1		A03405500 309B			
00			1		A03405500 309BR			
00			1		A03[illegible] 7A			

ALL THREADS UNIFIED SERIES, EXTERNAL THREADS TO BE CLASS 2A; INTERNAL THREADS TO BE CLASS 2B, AFTER PLATING, UNLESS OTHERWISE SPECIFIED

FINISH ON ALL MACHINED SURFACES UNLESS OTHERWISE SPECIFIED.
REMOVE ALL BURRS AND SHARP EDGES UNLESS OTHERWISE SPECIFIED.

DO NOT SCALE DWG.

DIMENSIONS ARE IN INCHES AND INCLUDE PLATING THICKNESS UNLESS OTHERWISE SPECIFIED

TOLERANCE UNLESS SPECIFIED		
BASIC	TWO PLACE	THREE PLACE
UP TO 6	± .1	±
6 TO 24	± .03	±
ABOVE 24	± .16	±
ANGULAR DIMENSION ±		

FINISH:

ASSY OR ITEM | QTY. NEXT | NEXT ASSY. | MODEL NO

APPLICATION

Sierra — CODE IDENT. NO. 54778

LEAR SIEGLER, INC.
SIERRA ELECTRONIC DIVISION
MENLO PARK, CALIFORNIA 94025

A4/A5 INTERFACE CABLE

DATE [illegible] | BY [illegible] | CHECKED [illegible]

SIZE C | DRAWING NO. CO3335300 | REV. C

SCALE NONE | STOCK AS [illegible] | SHEET [illegible]

THIS DRAWING AND SPECIFICATIONS SHOWN SHALL NOT BE COPIED OR USED WITHOUT WRITTEN CONSENT OF LEAR SIEGLER, INC., SIERRA ELECTRONIC DIVISION.

REVISIONS

ZONE	LTR	DESCRIPTION	DATE	APPROVED
	A	PILOT RUN RELEASE DB		
	A_1	PCO 2858		
	B	PILOT RUN RELEASE PER DCO 131		
	B	PRODUCTION RELEASE PER DCO 474		
	B	ADD 809A-R PER SCO 17924 (TYPE 1)		
	B_1	CHANGE TO 809BR PER SCO 18041	2/10/82	P.H.

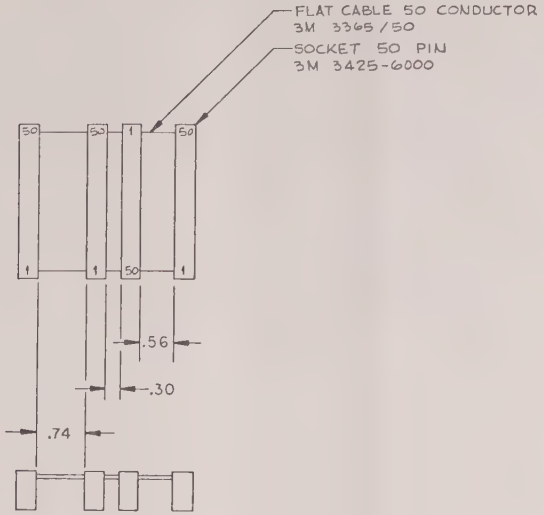

NOTES:

1. ALL CONNECTORS TO BE PARALLEL TO EACH OTHER WITHIN .015.

QTY.	QTY.	QTY.	QTY.	ITEM NO.	PART OR IDENTIFYING NO.	DESCRIPTION OR NOMENCLATURE	MATERIAL	SPEC OR NOTE

LIST OF MATERIAL OR PARTS LIST

ALL THREADS UNIFIED SERIES, EXTERNAL THREADS TO BE CLASS 2A; INTERNAL THREADS TO BE CLASS 2B, AFTER PLATING, UNLESS OTHERWISE SPECIFIED

FINISH ON ALL MACHINED SURFACES UNLESS OTHERWISE SPECIFIED.

REMOVE ALL BURRS AND SHARP EDGES UNLESS OTHERWISE SPECIFIED

DO NOT SCALE DWG.

DIMENSIONS ARE IN INCHES AND INCLUDE PLATING THICKNESS UNLESS OTHERWISE SPECIFIED.

TOLERANCE UNLESS SPECIFIED

BASIC	TWO PLACE	THREE PLACE
UP TO 6	± .03	±
6 TO 24	± .03	±
ABOVE 24	± .06	±

ANGULAR DIMENSION ±

FINISH:

ASSY OR ITEM	QTY. REQ'D	NEXT ASSY.	MODEL NO.
00	1	[illegible]	8018
00	1	[illegible]	[illegible]
00	1	[illegible]	[illegible]

APPLICATION

Sierra

LEAR SIEGLER, INC.
SIERRA ELECTRONIC DIVISION
MENLO PARK, CALIFORNIA 94025

CODE IDENT. NO. 54778

PWB INTERCONNECT CABLE

DATE 11/1/78
BY D. BRUCE
CHECKED
APPR. [illegible]

SIZE C
DRAWING NO. C03335200
REV B_1
SCALE NONE
STOCK AS 916400113
SHEET 1 OF 1

DWG. NO. C03335200

THIS DRAWING AND SPECIFICATIONS SHOWN SHALL NOT BE COPIED OR USED WITHOUT WRITTEN CONSENT OF LEAR SIEGLER, INC., SIERRA ELECTRONIC DIVISION.

REVISIONS				
ZONE	LTR	DESCRIPTION	DATE	APPROVED
	A	PILOT RUN RELEASE	11/20/75	
	A1	PCO 2977	4/23/80	
	B	PILOT RUN RELEASE PER DCO 131	6/12/80	
	B1	PER DCO 263	7/14/83	
	C	PRODUCTION REL DCO 474	2/25/91	

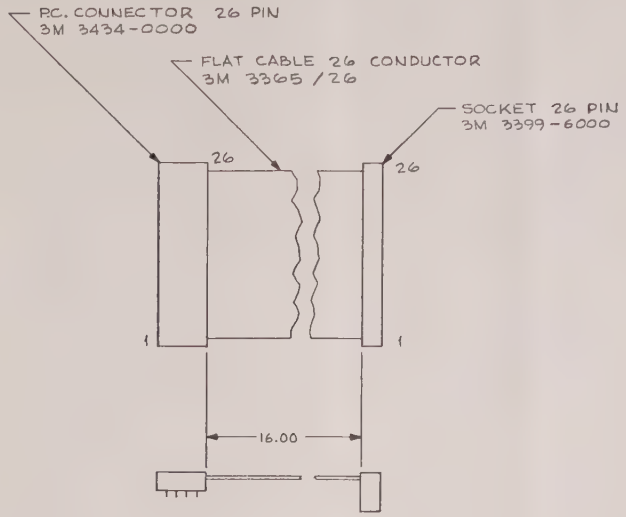

QTY	QTY	QTY	QTY	ITEM NO.	PART OR IDENTIFYING NO.	DESCRIPTION OR NOMENCLATURE	MATERIAL	SPEC OR NOTE
						LIST OF MATERIAL OR PARTS LIST		
			1		C03386500			
			1		D03386000			

ALL THREADS UNIFIED SERIES, EXTERNAL THREADS TO BE CLASS 2A; INTERNAL THREADS TO BE CLASS 2B, AFTER PLATING, UNLESS OTHERWISE SPECIFIED

FINISH ON ALL MACHINED SURFACES UNLESS OTHERWISE SPECIFIED.

REMOVE ALL BURRS AND SHARP EDGES UNLESS OTHERWISE SPECIFIED

DO NOT SCALE DWG.

DIMENSIONS ARE IN INCHES AND INCLUDE PLATING THICKNESS UNLESS OTHERWISE SPECIFIED.

TOLERANCE UNLESS SPECIFIED			
BASIC	TWO PLACE	THREE PLACE	
UP TO 6	± .05	±	
6 TO 24	± .03	±	
ABOVE 24	± .06	±	
ANGULAR DIMENSION ±			

FINISH-

ASSY OR ITEM	QTY NEXT	NEXT ASSY.	MODEL NO.
APPLICATION			

Sierra

LEAR SIEGLER, INC.
SIERRA ELECTRONIC DIVISION
MENLO PARK, CALIFORNIA 94025

CODE IDENT. NO. 54778

I/O PRINTER PORT INTERFACE CABLE

DATE	SIZE	DRAWING NO.	REV.
	C	C03335900	C

BY	SCALE	STOCK AS	SHEET
D BRUCE	1/1	9540011	1 OF 1

CHECKED

APPR.

DWG. C03335900 C

THIS DRAWING AND SPECIFICATIONS SHOWN SHALL NOT BE COPIED OR USED WITHOUT WRITTEN CONSENT OF LEAR SIEGLER, INC., SIERRA ELECTRONIC DIVISION.

REVISIONS

ZONE	LTR	DESCRIPTION	DATE	APPROVED
	A	PILOT RUN RELEASE	1-24-79	B CARLSON
	A1	PCO 2914	5/21/80	[illegible]
	B	PILOT RUN RELEASE PER DCO 131	6/12/80	[illegible]
		PRODUCTION REL PER DCO 474	[illegible]	[illegible]

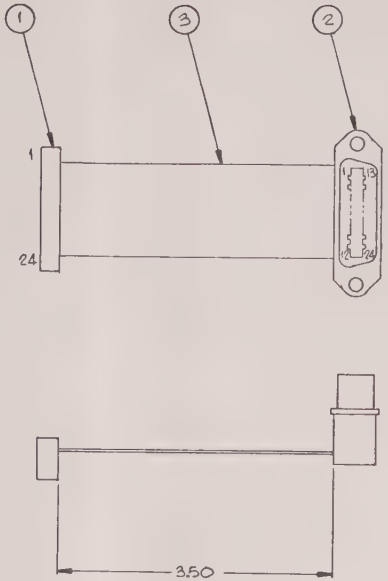

QTY.	QTY.	QTY.	QTY.	ITEM NO.	PART OR IDENTIFYING NO	DESCRIPTION OR NOMENCLATURE	MATERIAL	SPEC OR NOTE
			AR	3	3365-24	FLAT CABLE 28 AWG 24 COND		3 M
			1	2	552840-1	DELTA CONNECTOR 24 CONTACTS		AMP
			1	1	1-88377-0	SOCKET 24 CONTACTS		AMP

LIST OF MATERIAL OR PARTS LIST

ALL THREADS UNIFIED SERIES, EXTERNAL THREADS TO BE CLASS 2A; INTERNAL THREADS TO BE CLASS 2B AFTER PLATING, UNLESS OTHERWISE SPECIFIED

63 FINISH ON ALL MACHINED SURFACES UNLESS OTHERWISE SPECIFIED.

REMOVE ALL BURRS AND SHARP EDGES UNLESS OTHERWISE SPECIFIED.

DO NOT SCALE DWG.

DIMENSIONS ARE IN INCHES AND INCLUDE PLATING THICKNESS UNLESS OTHERWISE SPECIFIED.

TOLERANCE UNLESS SPECIFIED

BASIC	TWO PLACE	THREE PLACE
UP TO 6	± .06	±
6 TO 24	± .03	±
ABOVE 24	± .06	±

ANGULAR DIMENSION ±

FINISH:

ASSY OR ITEM	QTY NEXT	NEXT ASSY.	MODEL NO.
	1	C03334400	3004

APPLICATION

Sierra

LEAR SIEGLER, INC.
SIERRA ELECTRONIC DIVISION
MENLO PARK, CALIFORNIA 94025

CODE IDENT. NO. 54778

IEEE INTERFACE CABLE

DATE	SIZE	DRAWING NO.	REV.
1-24-79	C	C03335400	B

BY [illegible]
CHECKED [illegible]
APPR [illegible]

SCALE 1/1 | STOCK AS 916400111 | SHEET 1 OF 1

DWG. C03335400

THIS DRAWING AND SPECIFICATIONS SHOWN SHALL NOT BE COPIED OR USED WITHOUT WRITTEN CONSENT OF LEAR SIEGLER, INC., SIERRA ELECTRONIC DIVISION

REVISIONS				
ZONE	LTR	DESCRIPTION	DATE	APPROVED
	A1	DCO 3.21, 3.65, 3176, 3.86	7-4-79	
	B	PILOT RUN RELEASE PER DCO 179		
	B1	DCO NO. 185,	9-18-79	
	B2	DCO NO 222	11-5-79	
	B3	DCO NO. 300	12-28-79	
	B4	DCO NO 352	3-5-80	
	C	PRODUCTION REL DCO 474	7-9-80	

WIRE CUT LIST

PART NO	COLOR	GAUGE	LENGTH	QTY	WIRE NO	REMARKS
8137-0001	BRN	20	7 IN	1	1	STRIP BOTH ENDS 1/4 IN
8137-0001	BRN	20	7 IN	1	2	
8137-0001	BRN	20	3.5IN	1	3	
8137-0006	BLU	20	3.5IN	1	4	
8137-0006	BLU	20	4.5IN	1	5	

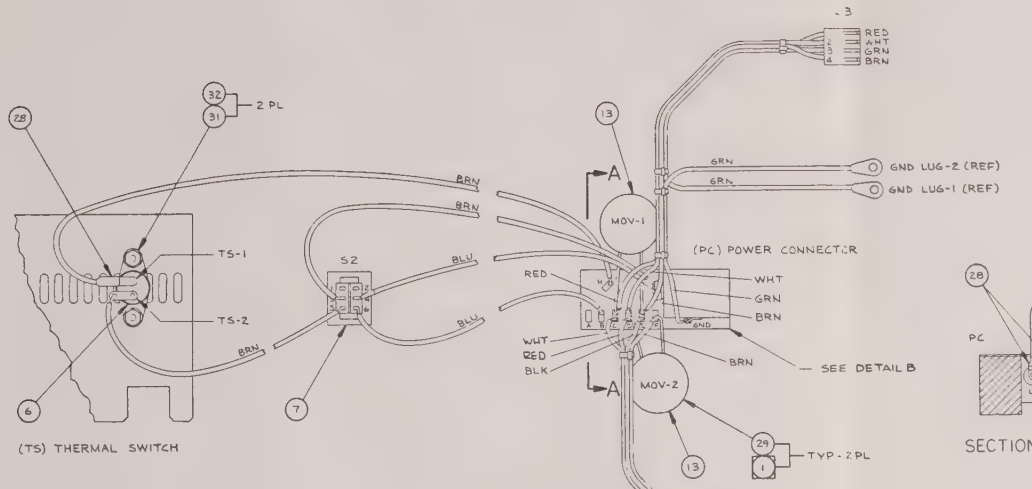

(TS) THERMAL SWITCH

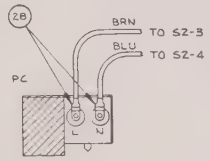

SECTION A-A

WIRE ROUTING

USE ITEM NO	WIRE NO.	COLOR	FROM	REMARKS	TO	REMARKS
6	1	BRN	TS-1		PC-H	
6	2	BRN	TS-2		S2-5	
7	3	BRN	S2-3		PC-L	
7	4	BLU	S2-4		PC-N	
7	5	BLU	S2-6		PC-B	
9	6	RED	J3-1		PC-C	
9	7	WHT	J3-2		PC-D	
9	8	BRN	J3-3		GND LUG-1	
9	9	BRN	J3-4		PC-XE	
11	10	WHT	J7-1		PC-C	
11	11	RED	J7-2		PC-D	
11	12	BLK	J7-3		PC-E	
11	13	BRN	J7-4		PC-F	
13			MOV-1		PC-C	
13			MOV-1		PC-E	
13			MOV-2		PC-D	
13			MOV-2		PC-F	

NOTES:

1. ADD TUBING AS REQUIRED.

THIS IS PIN CONFIGURATION FOR FILTER/CONNECTOR MODULE ITEM 15 (910100191)

THIS IS PIN CONFIGURATION FOR FILTER/CONNECTOR MODULE ITEM 16 (910100190)

DETAIL B

SEE A03384800 FOR PARTS LIST

QTY	QTY	QTY	QTY	ITEM NO.	PART OR IDENTIFYING NO.	DESCRIPTION OR NOMENCLATURE	MATERIAL	SPEC OR NOTE
						LIST OF MATERIAL OR PARTS LIST		

ALL THREADS UNIFIED SERIES, EXTERNAL THREADS TO BE CLASS 2A, INTERNAL THREADS TO BE CLASS 3B AFTER FINISH UNLESS OTHERWISE SPECIFIED

√ FINISH ON ALL MACHINED SURFACES UNLESS OTHERWISE SPECIFIED.
REMOVE ALL BURRS AND SHARP EDGES UNLESS OTHERWISE SPECIFIED

DO NOT SCALE DWG.
DIMENSIONS ARE IN INCHES AND INCLUDE FINISH THICKNESS UNLESS OTHERWISE SPECIFIED

TOLERANCE UNLESS SPECIFIED		
BASIC	TWO PLACE	THREE PLACE
UP TO 6	± .02	± .010
6 TO 24	± .03	±
ABOVE 24	± .06	±
ANGULAR DIMENSION ±		
FINISH:		

Sierra
A DIVISION OF LEAR SIEGLER INC
MENLO PARK, CALIFORNIA 94025

CODE IDENT. NO. 54778

POWER HARNESS

ASSY. OR ITEM	QTY. NEXT	NEXT ASSY.	MODEL NO
		A03384200	
APPLICATION			

DATE	SIZE	DRAWING NO.	REV.
7-9-80	D	ED03382200	C
BY R. SAKODA			
CHECKED			
APPR.	SCALE NONE	STOCK AS	SHEET 1 OF 3

ED03382200

THIS DRAWING AND SPECIFICATIONS SHOWN SHALL NOT BE COPIED OR USED WITHOUT WRITTEN CONSENT OF LEAR SIEGLER, INC., SIERRA ELECTRONIC DIVISION.

REVISIONS				
ZONE	LTR	DESCRIPTION	DATE	APPROVED

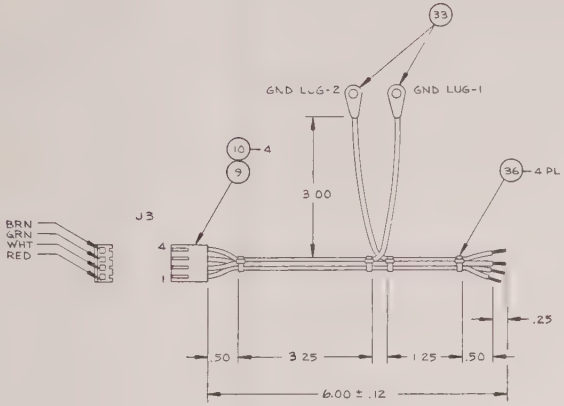

WIRE CUT LIST						
PART NO	COLOR	GAUGE	LENGTH	QTY	WIRE NO	REMARKS
8137-0002	RED	20	5.5 IN	1	6	
8137-0009	WHT	20	5.5 IN	1	7	
8137-0005	GRN	20	6.25 IN	1	8	
8137-0001	BRN	20	3.5 IN	1	9	
8137-0005	GRN	20	5.5 IN	1		TO GND LUG 2

NOTES:

1. STRIP LENGTH OF WIRES AT CONNECTOR IS .125 INCH.
2. BARE END STRIP LENGTH IS .25 INCH.

QTY	QTY	QTY	QTY	ITEM NO.	PART OR IDENTIFYING NO.	DESCRIPTION OR NOMENCLATURE	MATERIAL	SPEC OR NOTE
						LIST OF MATERIAL OR PARTS LIST		

ALL THREADS UNIFIED SERIES EXTERNAL THREADS TO BE CLASS 2A, INTERNAL THREADS TO BE CLASS 2B AFTER FINISH UNLESS OTHERWISE SPECIFIED

63 √ FINISH ON ALL MACHINED SURFACES UNLESS OTHERWISE SPECIFIED. REMOVE ALL BURRS AND SHARP EDGES UNLESS OTHERWISE SPECIFIED

DO NOT SCALE DWG.

DIMENSIONS ARE IN INCHES AND INCLUDE FINISH THICKNESS UNLESS OTHERWISE SPECIFIED

TOLERANCE UNLESS SPECIFIED

BASIC	TWO PLACE	THREE PLACE
UP TO 6	± .05	± .020
6 TO 24	± .03	±
ABOVE 24	± .06	±
ANGULAR DIMENSION ±		

FINISH

Sierra
A DIVISION OF LEAR SIEGLER INC
MENLO PARK, CALIFORNIA 94025

CODE IDENT. NO. 54778

POWER HARNESS

ASSY OR ITEM	QTY NEXT	NEXT ASSY	MODEL NO
		APPLICATION	

DATE 7-9-80
BY
CHECKED
APPR

SIZE D | DRAWING NO LD03382200 | REV. C

SCALE NONE | STOCK AS | SHEET 2 OF 3

DWG NO LD03382200

THIS DRAWING AND SPECIFICATIONS SHOWN SHALL NOT BE COPIED OR USED WITHOUT WRITTEN CONSENT OF LEAR SIEGLER, INC., SIERRA ELECTRONIC DIVISION.

REVISIONS

ZONE	LTR	DESCRIPTION	DATE	APPROVED

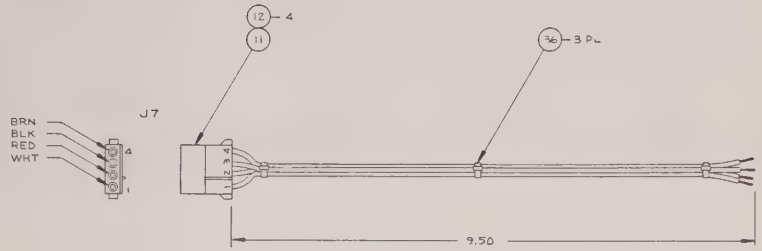

WIRE CUT LIST

PART NO.	COLOR	GAUGE	LENGTH	QTY	WIRE NO.	REMARKS
8137-0009	WHT	20	10.0 IN	1	10	
8137-0002	RED	20	10.0 IN	1	11	
8137-0000	BLK	20	10.0 IN	1	12	
8137-0001	BRN	20	10.0 IN	1	13	

NOTES:

1. STRIP LENGTH OF WIRES AT CONNECTOR IS .125 INCH.
2. OPEN END STRIP LENGTH IS 0.25 INCH.

QTY	QTY	QTY	QTY	ITEM NO	PART OR IDENTIFYING NO.	DESCRIPTION OR NOMENCLATURE	MATERIAL	SPEC OR NOTE
						LIST OF MATERIAL OR PARTS LIST		

ALL THREADS UNIFIED SERIES EXTERNAL THREADS TO BE CLASS 2A, INTERNAL THREADS TO BE CLASS 2B AFTER FINISH UNLESS OTHERWISE SPECIFIED

$\sqrt{}$ FINISH ON ALL MACHINED SURFACES UNLESS OTHERWISE SPECIFIED.

REMOVE ALL BURRS AND SHARP EDGES UNLESS OTHERWISE SPECIFIED.

DO NOT SCALE DWG.

DIMENSIONS ARE IN INCHES AND INCLUDE FINISH THICKNESS UNLESS OTHERWISE SPECIFIED

TOLERANCE UNLESS SPECIFIED		
BASIC	TWO PLACE	THREE PLACE
UP TO 6	± .05	± .020
6 TO 24	± .15	±
ABOVE 24	± .06	±
ANGULAR DIMENSION	±	

FINISH-

Sierra
A DIVISION OF LEAR SIEGLER INC
MENLO PARK, CALIFORNIA 94025

CODE IDENT. NO. 54778

POWER HARNESS

DATE 7-9-80
BY [illegible]
CHECKED
APPR

SIZE D | DRAWING NO D03382200 | REV. C

SCALE NONE | STOCK AS | SHEET 3 OF 3

ASSY OR ITEM	QTY NEXT	NEXT ASSY.	MODEL NO.
		APPLICATION	

D03382200

REVISIONS

SYM	DESCRIPTION	DATE	APPROVED
A	PILOT RUN RELEASE PER DCO 179	7-14-80	
A1	DCO # 274	12-2-80	
A2	DCO # 300	12-2-80	
A3	DCO # 352	12-2-80	
A4	DCO # 425	1-27-81	
B	PRODUCTION RELEASE PER DCO 474	2-25-81	

E03334400	1	809 A
NEXT ASSY.	QTY	MODEL NO.

LSi Sierra

LEAR SIEGLER, INC.
SIERRA ELECTRONIC DIVISION
MENLO PARK, CALIFORNIA 94025

CODE IDENT. NO. 54778

POWER HARNESS P/L

DATE	SIZE	DRAWING NO.	REV
7-9-80	A	A03384800	B
BY R. SAKODA			
APP'D 7-15-81	STOCK AS	SHEET 1 OF 2	

671-14-1

QTY	QTY	QTY	QTY	ITEM	PART NO.	DESCRIPTION	REF.
			1	37	913200007	1 AMP, SLO-BLO, FUSE	
				36			
				35			
				34			
			2	33	918400001	SOLDER LUG	
			2	32	807501007	NUT, #4	
			2	31	816501013	WASHER, FLAT, #4	
				30			
			A/R	29	4047-0014	TUBING, #4 ID, BLACK	
			A/R	28	4047-0038	SHRINK TUBING, CLEAR	
				27			
				26			
				25			
			15 IN	24	8137-0009	WIRE, 20 AWG, WHT	
			8 IN	23	8137-0006	WIRE, 20 AWG, BLU	
			11 IN	22	8137-0005	WIRE, 20 AWG, GRN	
			15 IN	21	8137-0002	WIRE, 20 AWG, RED	
			32.5 IN	20	8137-0001	WIRE, 20 AWG, BRN	
			9.5 IN	19	8137-0000	WIRE, 20 AWG, BLK	
				18			
				17			
SEE	NOTE 1.		OPT.	16	910100190	FILTER/CONNECTOR MODULE	PC
			1	15	910100191	FILTER/CONNECTOR MODULE	PC
				14			
			2	13	913600027	MOV V130LA20A	MOV-1, MOV-2
			4	12	914800221	CONTACT PIN	J7
			1	11	914800220	CONNECTOR, 4 PIN	J7
			4	10	914800342	CONTACT PIN	J3
			1	9	914800347	LOCKING CONNECTOR 4 PIN	J3
				8			
			1	7	911000111	DPDT SWITCH	S2
			1	6	913700006	THERMAL SWITCH	TS
				5			
				4			
				3			
				2			
			REF	1	D03382200	POWER HARNESS	

LIST OF MATERIAL

NOTES:

1. USE ITEM 16 ONLY IF ITEM 15 IS NOT AVAILABLE.

Sierra

CODE IDENT NO. 54778

SIZE A

DRAWING NO. A03384800

SCALE –

SHEET 2 OF 2

BISHOP GRAPHICS/ACCUPRESS RECORDER NO. A 0180